Dead-On Accurate Cuts **EVERY TIME**

SHOP SECRETS for Cutting Thin Stock

Great Glue Joints **MADE EASY**

Woodsmith®

Woodsmith.com

Vol. 36 / No. 216

CLASSIC TECHNIQUE FOR CURVED PARTS

Versatile Vintage Tools

Router Bit Rehab — Save Money, Get Better Cuts

ALSO:

LUMBERYARD LINGO — Know How to Buy

SUPER-STRONG MAGNETS for Every Purpose

A Publication of August Home Publishing

Woodsmith®

PUBLISHER Donald B. Peschke

EDITOR Bryan Nelson
MANAGING EDITOR Vincent Ancona
SENIOR EDITOR Wyatt Myers
ASSOCIATE EDITOR Dennis Perkins
ASSISTANT EDITOR Robert Kemp
CONTRIBUTING EDITORS Phil Huber, Randall A. Maxey, Dennis Volz
EXECUTIVE ART DIRECTOR Todd Lambirth
SENIOR ILLUSTRATORS Harlan V. Clark, Erich Lage, David Kallemyn
SENIOR GRAPHIC DESIGNER Bob Zimmerman
GRAPHIC DESIGNER Becky Kralicek
CONTRIBUTING ILLUSTRATORS Dirk Ver Steeg, Peter J. Larson

CREATIVE DIRECTOR Ted Kralicek
ASSISTANT DESIGN DIRECTOR Chris Fitch
SENIOR PROJECT DESIGNER Jim Downing
PROJECT DESIGNER/BUILDER John Doyle
CAD SPECIALIST Steve Johnson
SHOP CRAFTSMEN Steve Curtis, Dana Myers
SENIOR PHOTOGRAPHERS Crayola England, Dennis Kennedy
ASSOCIATE STYLE DIRECTOR Rebecca Cunningham
SENIOR ELECTRONIC IMAGE SPECIALIST Allan Ruhnke
PRODUCTION ASSISTANT Minniette Johnson
VIDEO EDITOR/DIRECTOR Mark Hayes
VIDEO PRODUCTION SPECIALIST Patrick McDaniel

Woodsmith® (ISSN 0164-4114) is published bimonthly by August Home Publishing Company, 2200 Grand Ave, Des Moines, IA 50312.
Woodsmith® is a registered trademark of August Home Publishing.

Copyright© 2014 August Home Publishing Company. All rights reserved.

Subscriptions: Single copy: $4.95.
Canadian Subscriptions: Canada Post Agreement No. 40038201. Send change of address information to PO Box 881, Station Main, Markham, ON L3P 8M6. Canada BN 84597 5473 RT
Periodicals Postage Paid at Des Moines, IA, and at additional offices.
Postmaster: Send change of address to *Woodsmith*, Box 37106, Boone, IA 50037-0106.

WoodsmithCustomerService.com

ONLINE SUBSCRIBER SERVICES

- **VIEW** your account information
- **RENEW** your subscription
- **CHECK** on a subscription payment
- **PAY** your bill
- **CHANGE** your mailing or e-mail address
- **VIEW/RENEW** your gift subscriptions
- **TELL US** if you've missed an issue

CUSTOMER SERVICE **Phone: 800-333-5075**

SUBSCRIPTIONS
Customer Service
P.O. Box 842
Des Moines, IA 50304-9961
subscriptions@augusthome.com

EDITORIAL
Woodsmith Magazine
2200 Grand Avenue
Des Moines, IA 50312
woodsmith@woodsmith.com

AUGUST HOME PUBLISHING COMPANY

Printed in U.S.A.

from the editor
Sawdust

Just over a year ago, we featured plans for a bedroom suite consisting of a dresser, bed, nightstand, and mirror. The projects were presented in consecutive issues, but upfront, we made it clear that you could start building knowing that plans for the rest of the collection weren't far behind.

Starting with this issue, we're doing something similar. Only this time the focus is the dining room (drawing above) — something for which we've had numerous requests. In this issue, you'll find the foundation for any dining room: a set of chairs and an elegant, expandable table. Then, we'll follow up with a matching hutch and, finally, a buffet.

If you've been interested in giving your dining room a new look, these projects are a great way to get started. And by time you finish up the dining table and chairs, plans for the hutch should be arriving in your mailbox or at the local newsstand. Let me know what you think about featuring projects this way, and if there are any other project collections you'd like to see presented in a similar manner.

Bryan

STATEMENT OF OWNERSHIP, MANAGEMENT, AND CIRCULATION
(Required by 39 U.S.C. 3685)

1. Publication Title: *Woodsmith*. 2. Publication No.: 0164-4114 3. Filing Date: September 30, 2014. 4. Issue Frequency: Bimonthly. 5. No. of issues published annually: 6 (six). 6. Annual subscription price: $24.95. 7. Complete mailing address of known office of publication: 2200 Grand Avenue, Des Moines, (Polk County), Iowa 50312-5306. 8. Complete mailing address of the headquarters or general business offices of the publisher: 2200 Grand Avenue, Des Moines, (Polk County), Iowa 50312-5306. 9. Full names and complete mailing addresses of publisher, editor, and managing editor: Publisher: Donald B. Peschke, 2200 Grand Avenue, Des Moines, Iowa 50312; Editor: Bryan Nelson, 2200 Grand Avenue, Des Moines, Iowa 50312; Managing Editor: Vincent Ancona, 2200 Grand Avenue, Des Moines, Iowa 50312. 10. Owner: August Home Publishing Company, 2200 Grand Avenue, Des Moines, Iowa 50312; Donald B. Peschke, 2200 Grand Avenue, Des Moines, Iowa 50312. 11. Known bondholders, mortgagees, and other security holders owning 1 percent or more of total amount of bonds, mortgages or other securities: None. 12. (Does not apply.) 13. Publication Title: *Woodsmith*. 14. Issue Date for Circulation Data Below: August/September 2014 15. Extent and nature of circulation:

	Average no. copies each issue during preceding 12 months	Average no. copies of single issue published nearest to filing date
A. Total number of copies (net press run)	201,274	195,139
B. Paid circulation (by mail and outside the mail):		
1. Paid/requested outside-county mail subscriptions stated on PS Form 3541	162,412	157,859
2. Mailed in-county paid subscriptions stated on PS Form 3541	0	0
3. Paid distrib. outside the mails (sales through dealers/carriers, street vendors, counter sales, and other paid distrib. outside USPS)	10,690	10,183
4. Paid distribution by other classes of mail through the USPS	0	0
C. Total paid distribution	173,102	168,042
D. Free or nominal rate distribution (by mail and outside the mail)		
1. Free or nominal rate outside-county copies included on PS form 3541	162	226
2. Free or nominal rate in-county copies included on PS Form 3541	0	0
3. Free or nominal rate copies mailed at other classes through the USPS	0	0
4. Free or nominal rate distribution outside the mail (carriers or other means)	0	0
E. Total free or nominal rate distribution	162	226
F. Total distribution	173,264	168,268
G. Copies not distributed	28,010	26,871
H. Total	201,274	195,139
I. Percentage paid and/or requested circulation	99.91%	99.87%
16. Electronic Copy Circulation; Woodsmith		
A. Paid Electronic Copies	0	0
B. Total paid print copies + paid electronic copies	173,102	168,042
C. Total print distribution + paid electronic copies	173,264	168,268
D. Percentage paid (both print and electronic copies)	99.91%	99.87%

I certify that 50% of all my distribution copies (electronic and print) are paid above a nominal price.
17. Publication of Statement of Ownership. Will be printed in the Jan. 2015 (#216) issue of this publication.
18. I certify that all information furnished on this form is true and complete. (signed) Bryan Nelson, Editor

On occasion, we allow companies whose products and services may be of interest to you to send advertising mail to our subscribers. We are careful to choose ethical companies that have information of genuine interest to our subscribers. Most of our subscribers appreciate these materials. However, if you prefer to have your name deleted from the mailing list made available to other companies, please write to us at Woodsmith, 2200 Grand Avenue, Des Moines, IA 50312

contents

No. 216 December/January 2015

Departments

from our readers
Tips & Techniques 4

all about
Amazing Rare-Earth Magnets 8

tools of the trade
Resawing for Thin Stock 10

jigs & fixtures
Dead-On Cuts Every Time 12

tips from our shop
Shop Notebook 30

woodworking technique
Steam Bending Curved Parts 42

working with tools
Router Bit Rehab 44

hand tool skills
Choosing a Vintage Hand Saw . . 46

woodworking essentials
Great Glue Joints Made Easy . . . 48

questions & answers
Lumberyard Lingo 50

Projects

weekend project
Finger-Jointed Keepsake Box 14
The gentle curves and fine details of this box make it eye-catching. But it's the techniques for cutting narrow finger joints and smooth, matching curves that provide the woodworking challenge.

weekend project
Curved Tray Centerpiece 18
This decorative tray is the perfect project for honing your band saw skills. When you're done, the smooth, seamless look will complement the setting in any room.

heirloom project
Elegant Dining Table 22
The expandable design of this table makes it easy to accommodate a number of guests. And the simple construction techniques ensure success from start to finish.

heirloom project
Stylish Dining Chairs 32
Comfortable seating is the name of the game with these chairs. Steam-bent slats create the curves, and rock-solid construction ensures they'll last a lifetime.

from our readers

Tips & Techniques

Simple Band Saw Fence

Recently, I needed to resaw some boards on my band saw to make bookmatched door panels. Unfortunately, the stock fence that came with my band saw was too short and too cumbersome to adjust to work effectively. I wanted something that could be adjusted quickly, but I didn't want to invest the money in a dedicated resaw fence.

Since I already had a couple switchable magnets (magnetic holder beds) on hand, I devised this fence system that meets all of my needs. It's tall enough to accommodate the stock that I typically resaw. And with the magnets acting as anchors, it couldn't be simpler to adjust.

FENCE CONSTRUCTION. The fence is made from a piece of plywood with two counterbored holes at either end to attach the magnets. Most switchable magnets have a threaded hole in one face for this purpose. I also clipped the top corners of the fence to remove the sharp edges.

To use the fence, simply set it in place on the band saw table and turn each of the magnets to the "on" position.

Jon Uithol
Madison, Indiana

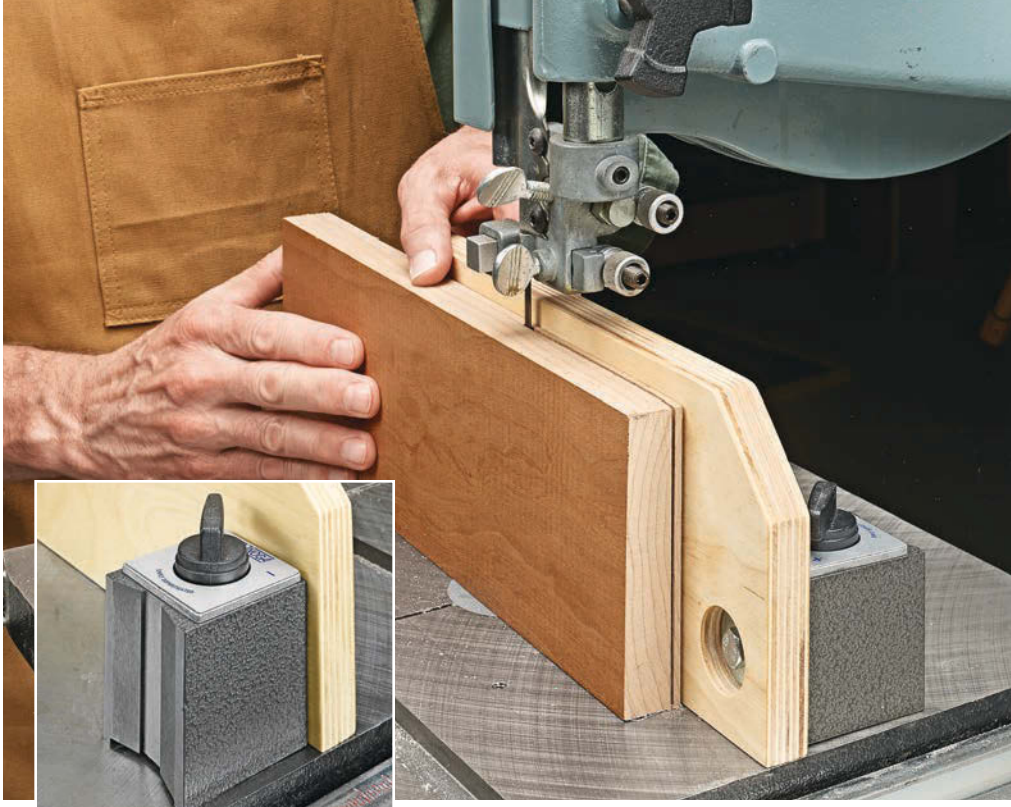

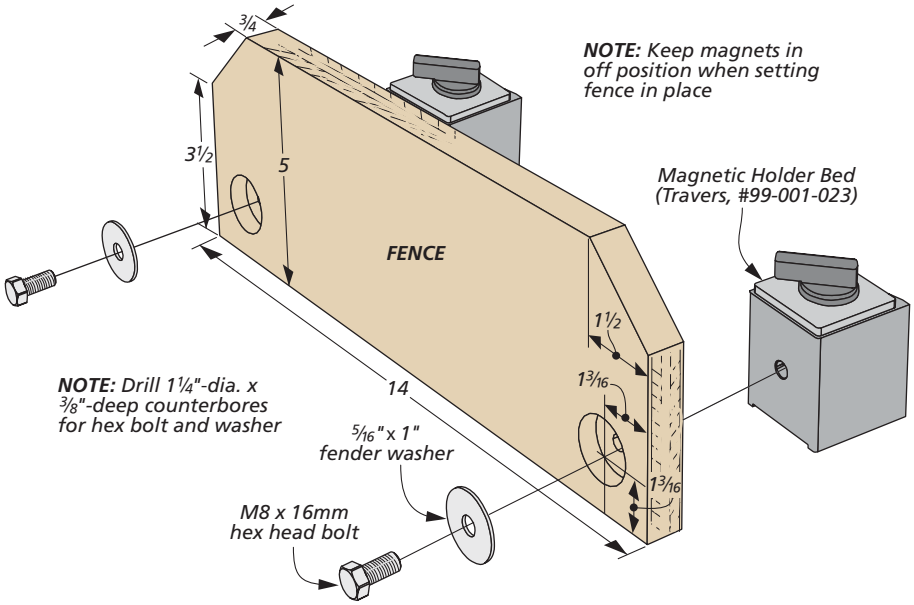

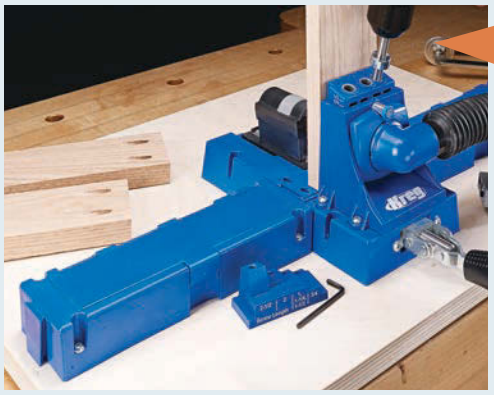

Win This Kreg K5 Jig

Simply send us your favorite shop tips. If your tip or technique is selected as the featured reader's tip, you'll win a *Kreg K5 Jig* just like the one shown here. To submit your tip or technique, just go online to *Woodsmith.com* and click on the link, "SUBMIT A TIP." There you can submit your tip and upload your photos for consideration.

The Winner!

Congratulations to Jon Uithol, the winner of this *Kreg K5 Jig*. To find out how you can win this jig, check out the information at left.

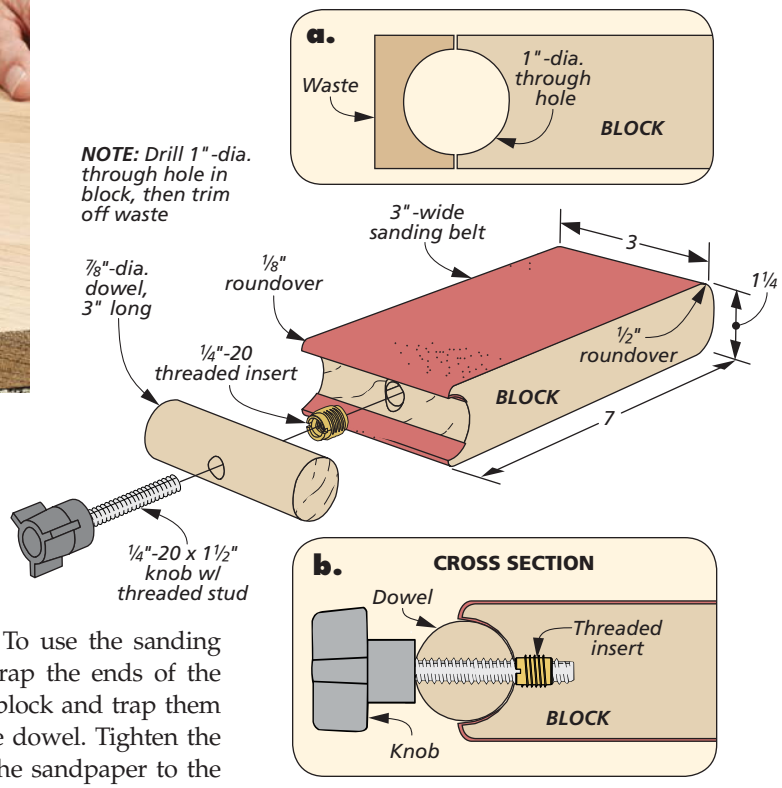

Recycled Sanding Belt

Tearing a sanding belt on a belt sander can be frustrating. This is especially true when the belt still has a lot of life left in it. Instead of tossing them in the trash, I made this simple sanding block to give those torn belts a second life. I sized my block to fit 3"-wide sanding belts, but this idea will work for other sizes, as well.

BLOCK DETAILS. The sanding block is simply an oversize piece of wood with a through hole drilled in the edge and the waste section removed (detail 'a'). A short dowel is secured to the sanding block with a knob and threaded insert.

USING THE BLOCK. To use the sanding block, simply wrap the ends of the belt around the block and trap them in place with the dowel. Tighten the knob to secure the sandpaper to the block and you're ready to sand.

Serge Duclos
Delson, Quebec

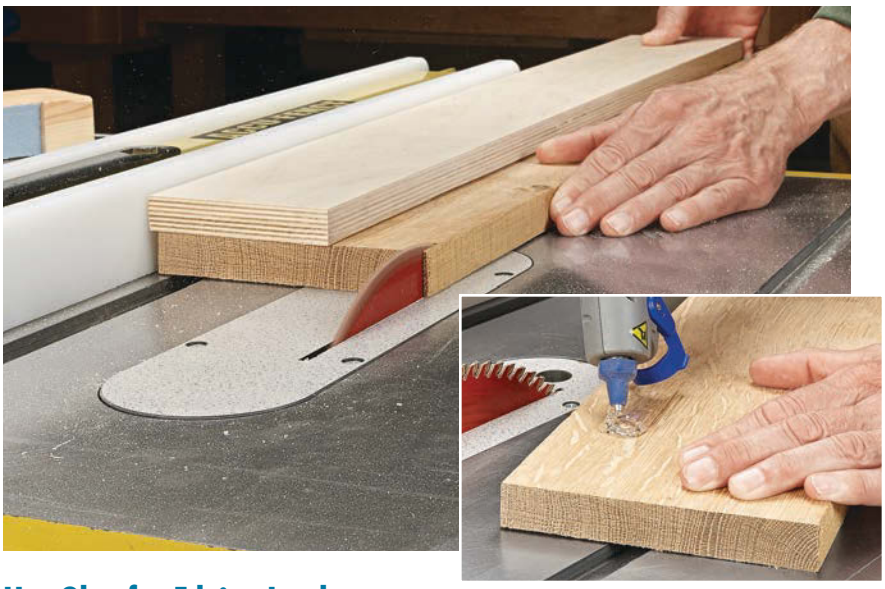

Hot Glue for Edging Lumber

For many of my woodworking projects, I use short pieces of rough-sawn stock. Some of the edges are too uneven to safely run them through my jointer to true one edge. Instead, I devised the following technique that allows me to cut one straight edge using my table saw.

SIMPLE SETUP. Start by placing the rough-sawn piece against the rip fence. Position the fence to get the best use out of the board and lock it down.

I then place a few dabs of hot glue down the face of the board closest to the fence to attach a narrow, straight-edged piece of plywood. The plywood should overlap the workpiece and ride against the fence. When the glue hardens, run the pieces through the table saw to get a perfect straight edge on the board. The dried glue scrapes off easily.

Tom Moss
Bradenton, Florida

DIGITAL WOODSMITH

SUBMIT TIPS ONLINE

If you have an original shop tip, we would like to hear from you and consider publishing your tip in one or more of our publications. Jump online and go to:

Woodsmith.com
Click on the link,
"SUBMIT A TIP"

You'll be able to tell us all about your tip and upload your photos and drawings. You can also mail your tips to "Woodsmith Tips" at the editorial address shown on page 2. We will pay up to $200 if we publish your tip.

RECEIVE FREE ETIPS by EMAIL

Now you can have the best, time-saving secrets, solutions, and techniques sent directly to your email inbox. Just go to

Woodsmith.com
and click on
"WOODSMITH TIPS"

You'll receive one of our favorite tips each and every week.

Stored. C-clamp swings down and out of the way when pin is withdrawn.

Mortising Machine Clamp

The hold-down on my benchtop mortiser doesn't hold workpieces as firmly as I'd like. If the workpiece twists even just a little bit, the chisel binds in the mortise. I also wanted a way to clamp the workpiece against the fence of my mortiser.

To do this, I added a "modified" C-clamp to an auxiliary base that I was building for my mortiser, as shown in the photos at left. It's designed to swing out of the way when not in use.

MODIFY THE CLAMP. First, cut off the top leg of a 6" C-clamp (detail 'a') and round the cut end so it will swing easily. Then drill holes in the remaining body of the clamp for the pivot pin and locking pin.

Next, cut two pieces of plywood to size. These will serve as the base for the mortising machine. The pivot and locking pins (main drawing below) are sandwiched between the plywood pieces. Grooves must be routed in both halves to house the pins (detail 'b'). For added stability, I attached a cleat to the bottom layer so I could clamp the base in the vise on my workbench.

DOWEL HANDLE. To be able to slide the locking pin side to side, grind a flat spot onto the rod. Then drill and tap a hole through the flat spot to accept a carriage bolt that passes through a hardwood dowel handle. A square nut between the slot and the rod allows a slight twist of the handle to tighten the locking pin in place.

When I was satisfied that everything was working smoothly, I screwed the two plywood pieces together and bolted the base to my mortiser stand.

Donna Casperson
Dillsburg, Pennsylvania

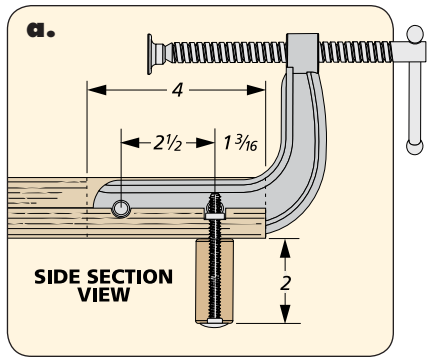

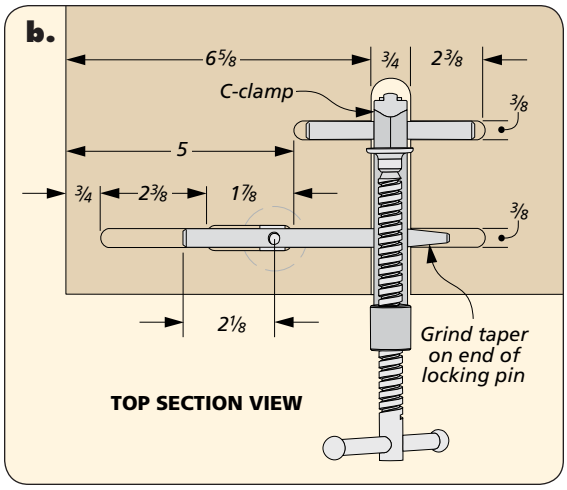

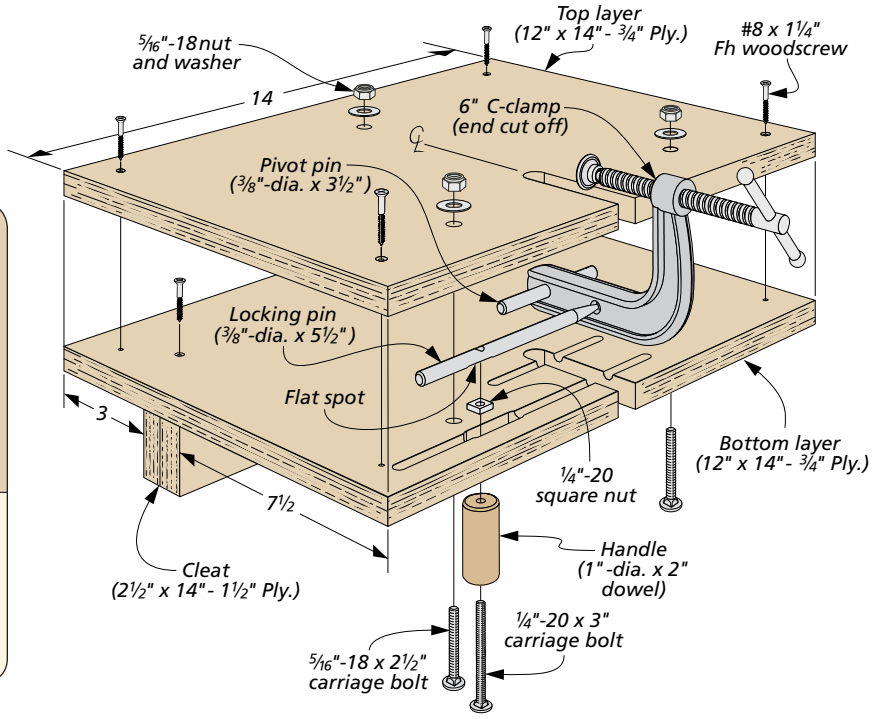

Pipe Clamp Rack

Having accumulated a number of *Bessey* H-style pipe clamps over the years, I eventually came to realize that leaning them in the corner of the shop was not the ideal storage option. They were difficult to get to and I always managed to knock a couple over when picking them up. Since I had some free wall space available, I decided to make this simple storage rack to get my clamps out of the corner and make them more accessible.

SIMPLE IS BETTER. Because of the wide "feet" on this style of clamp, I quickly realized that all I needed was a piece of stock with a rabbet along the back edge as shown in the photo at right. The clamp's feet simply hook over the lip formed by the rabbet. This holds them securely in place, but also leaves them easy to remove from the rack. And the best part is that if I do acquire more clamps down the road, it's a snap to cut and mount a longer rack with very minimal expense.

Lem Greer
Loveland, Colorado

QUICK TIPS

Handy Cupcake Liners. To keep from making a mess on his workbench, *Timothy Hersey* of Citrus Heights, California uses foil cupcake liners to mix epoxy. The liners are small and can be held in one hand. They can be folded to pour the contents and, best of all, they're disposable.

Movable Task Lights. Instead of installing fixed task lighting to the tools in his shop, *Bill Wells* of Olympia, Washington bought a couple battery-powered puck lights. Velcro strips attached to the back of each light make them easy to move where they are needed.

Handy Measuring Tape. To avoid misplacing his tape measure in the shop, *Malcolm Lyle* of Mechanicsville, Virginia took several identical tape measures and replaced the belt clip with a rare-earth magnet. This allows him to keep one attached to each major tool in his shop.

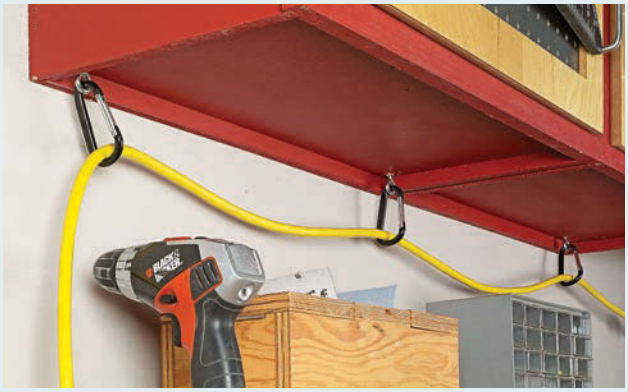

Carabiner Cord Holder. *Peter Sherrill* of Forestville, Wisconsin keeps several carabiners in his tool box. They come in handy for temporarily suspending power cords overhead and out of the way. They're easy to install and quick to remove when not needed.

all about

amazing Rare-Earth Magnets

I've always been fascinated by magnets. Using iron filings to show the size and shape of magnetic fields is a lesson from grade school science class that sticks in my mind to this day. But those older, horseshoe-shaped magnets were nothing compared to the rare-earth magnets in common use today.

Rare-earth magnets are found in everything from computer hard drives to experimental magnetic-levitation trains. And they have lots of everyday applications for the shop. You've probably seen them used for door catches, shop jigs, and tool racks. The box on the opposite page shows an easy way to make a tool rack without the magnets being visible.

▲ For cabinet doors and many other uses, buying cups, magnets, and washers as a set is the most economical option.

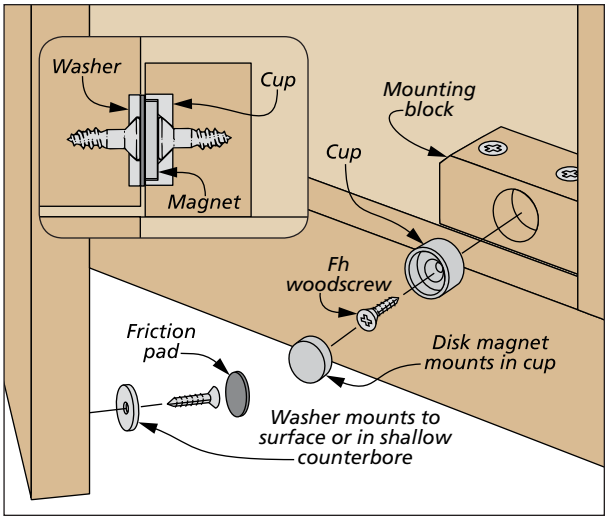

WHAT ARE THEY? Rare-earth magnets were developed in the 1970s, and their use became widespread by the 1990s when prices dropped. They're named for their chemical composition — a rare-earth element, typically neodymium, combined with iron and boron. (The other type commonly in use is the samarium-cobalt, but it's usually reserved for high-temperature applications.)

They're the strongest magnets made today, up to ten times as strong as *alnico* (aluminum-nickel-cobalt) magnets that were used prior to their development. In addition to their power, rare-earth magnets won't lose their strength under normal conditions.

WHAT'S AVAILABLE? You'll find rare-earth magnets in all shapes and sizes. Square, round, rod-shaped, even spherical magnets are readily available. The sources listed on page 51 offer a full array of shapes and sizes.

Generally, however, I prefer the round, disc magnets for shop applications. I seldom use anything larger than 1"-diameter. A couple of 1" rare-earth magnets are powerful enough to hold a small metal toolbox to the side of a drill press or other shop tool. The main photo on the opposite page gives you an idea of what a 1" magnet can hold. The chart below has the approximate values for other common sizes.

POLARITY. I won't rehash old science lessons, but suffice it to say that rare-earth magnets have both north and south poles, like the horseshoe magnets from childhood. To get the most out of a magnet, you want to mount it in a way that maximizes its power in one pole. When you place a magnet on a backing plate, you channel the most force into one pole. The easiest way to do this is to mount the magnet in a ferromagnetic cup (ferromagnetic elements are iron, nickel, and cobalt). By mounting a disc magnet in a matching cup, you increase the strength of the field fourfold.

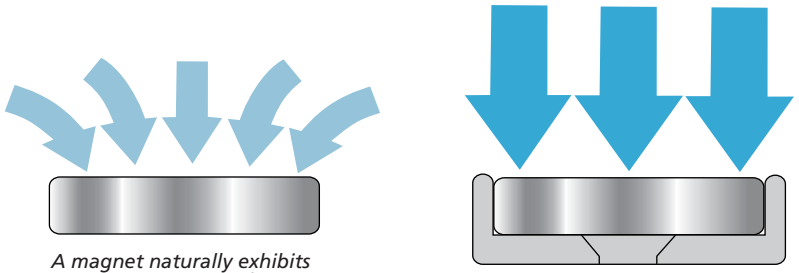

A magnet naturally exhibits weaker, vortex-like forces near the edges

Adding a ferromagnetic cup aligns the magnetic forces and increases the strength by a factor of four

MAGNET SELECTION CHART

Size	Pull
¼"- dia. x ⅛"	4 lbs.
½"- dia. x ⅛"	8 lbs.
¾"- dia. x ⅛"	10 lbs.
1"- dia. x ⅛"	15 lbs.

(Values shown are approximate; exact pull strength may vary.)

CONVENIENT SETS. Fortunately, disc magnets and matching cups are available in several sizes. I usually buy them as sets, like the ones shown in the photo at the bottom of the opposite page. This makes creating magnetic catches on doors a breeze. Just drill a shallow counterbore for the cup. The cups have a countersunk screw hole. Drive the screw and you're ready to go.

To get the maximum holding power, you want the magnet to be flush with the surface when mounted in the cup. An easy way to make sure that happens is to measure the thickness of the cup. A caliper is the perfect tool for this. Then drill a hole of that depth in the workpiece and install the cup. After that, the magnet pops into place.

WASHERS & FRICTION PADS. You'll notice that there are two other components in the set. First, there's the washer that's installed opposite the magnet to catch it. Once again, it's already drilled and countersunk, ready for a flathead woodscrew.

Finally, some sets include a fabric friction pad. This fits over the washer, reducing the noise when you close the door and making it a little easier to separate the magnet and washer.

SAFETY CONSIDERATIONS. An unfortunate side effect of all this power is that you can hurt yourself by pinching your skin between a couple of magnets. So you'll also need to keep them out of the hands of small children. And if you get one too near a computer hard drive or a credit card, you can have problems, as well. The strong field generated by a rare-earth magnet can ruin electronics and magnetic strips.

And as long as we're on the topic of safety, you need to keep them away from anyone with a pacemaker. Although most pacemakers today are designed to prevent damage from casual exposure, it's still a good idea to limit the risk.

Whether in jigs or on projects, these powerful magnets are up to the task. Once you try them out, you're sure to find plenty of uses. W

TOOL ORGANIZATION OPTION

Rare-earth magnets are perfect for making customized tool racks. Using ¾" discs, you can make an attractive rack that hides the magnets from view. The drawing at right shows an easy way to embed the magnets into the back face of the rack. Drill a hole in the mounting board using a Forstner bit, leaving only ⅛" remaining. Then simply add a dab of epoxy to hold the magnet in place.

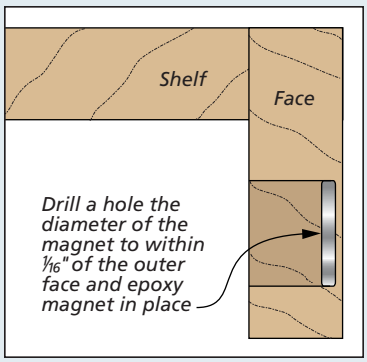

▲ A simple magnetic rack can secure several handy tools on a pegboard tool rack or mounted directly to the wall.

essential gear for Band Saw Resawing

Band saws get the most attention for their ability to cut elaborate curves easily. But curve-cutting is just one of the two main tasks that a band saw excels at. The other one — and the one that can really save you some money in your woodworking projects — is resawing.

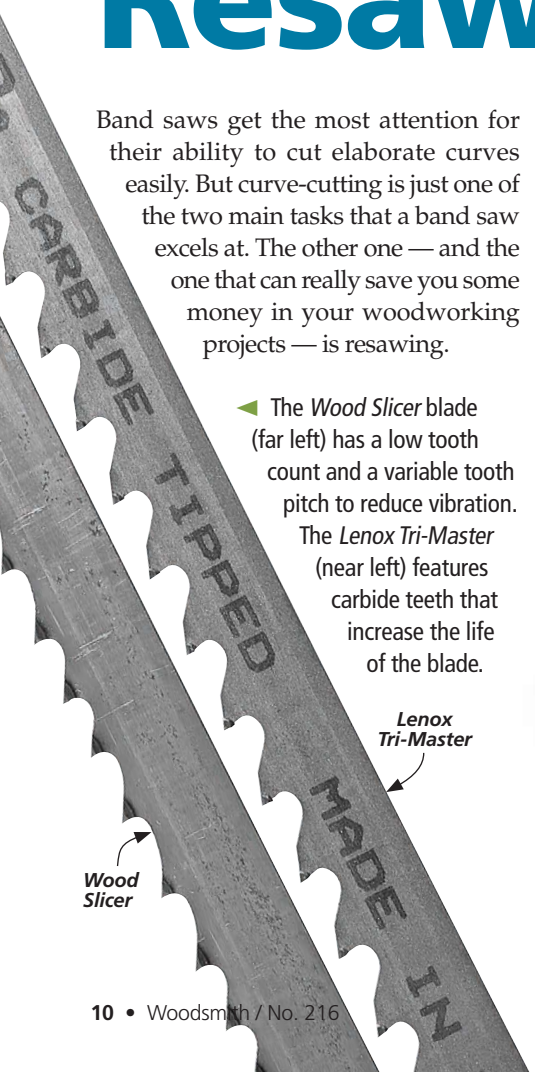

◄ The *Wood Slicer* blade (far left) has a low tooth count and a variable tooth pitch to reduce vibration. The *Lenox Tri-Master* (near left) features carbide teeth that increase the life of the blade.

Resawing, or the process of turning a thicker board into a thinner one, allows you to create thin stock and even veneers for projects without wasting all that extra wood by planing it down. It helps your budget, too, as buying thin stock and veneers can get expensive.

Though it uses the same tool, resawing requires a different approach than cutting a curve. I've found that setting the saw up with the right equipment makes a big difference in the results.

BLADES. The first consideration when resawing is choosing the right blade. While a ¼" blade might be great at cutting curves, you'll want a wider blade that will run straight without deflection when resawing.

Also, it's best to choose a blade with fewer teeth per inch than the average blade. Since you're removing so much stock when resawing, having fewer teeth on the blade prevents heat build-up and wear while offering less resistance. Blades with fewer teeth also have bigger gullets that clear out sawdust better, too.

It's possible to get decent resaw cuts with a standard ½"- or ¾"-wide blade,

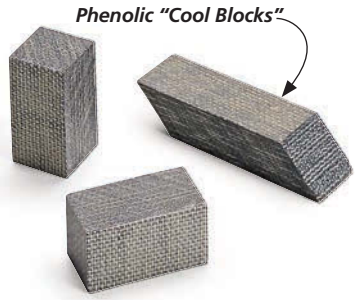

▲ Guide blocks made from phenolic rather than metal can be set closer to the blade to reduce the amount of blade drift.

▲ These *Bandrollers* feature ball bearings that can be set right on the blade for the ultimate in drift prevention.

but there are blades available at reasonable prices (about $30) that are designed specifically for the task. One I've had good luck with over the years is the *Wood Slicer* from *Highland Woodworking* (lower left photo, opposite page). It has three to four teeth per inch, and the spacing is varied from tooth to tooth (variable tooth pitch) to reduce vibration while cutting. Both ½"- and ¾"-wide blades are available, but I find the ½" blade works great for most of my resawing work.

There are also carbide-tipped resaw blades from *Lenox* and other manufacturers for use when resawing. These stay sharper a lot longer, but they are also significantly more expensive. The blade shown on the opposite page set me back about $130. Still, if you find yourself doing a lot of resawing, then the upgrade is worth the price.

GUIDE BLOCKS. Proper guide block setups are always important on the band saw, but it's especially critical for resawing. If your guide blocks are spaced too far away from the blade, the blade can drift and leave you with an uneven or curved cut. This is definitely not the desired outcome when you're trying to slice a clean piece of veneer or other thin stock.

For this reason, it might be worth considering a guide block upgrade on your band saw. *Cool Blocks*, for example, are made of phenolic (photo, opposite page). This means you can set them closer to the blade for tighter tolerances and less blade drift without heating the blade.

▲ The switchable magnets on the *Magswitch* resaw guide allow you to position and lock it down anywhere on the band saw table.

A more expensive option (around $70) is a set of *Bandrollers*. Instead of blocks, these guides feature ball bearings that rest right on the blade for the tightest tolerances possible.

RESAW FENCES. When I first started resawing, I assumed the operation would require a straight cut, so I'd set the fence straight like for a table saw rip cut. But I quickly discovered that the blade tends to drift and not cut perfectly parallel to the fence. As a result, you may need to skew the feed angle as you push the workpiece through the blade.

A good way to allow for drift and still achieve good results is to guide the workpiece with a single-point fence. As the name indicates, this fence touches the workpiece at a single point, rather than along its entire face. This allows you to pivot the workpiece to account for blade drift. Marking a line on the top edge of the piece will also help you guide it through the blade accurately.

▲ The fence angles away from the roller bearings to allow you to compensate for blade drift as you cut the stock.

Single-point fences can be shop-made (see the box below) or purchased. One good manufactured option is *Kreg*'s *Resaw Guide* attachment that fits their *Precision Band Saw Fence* (main photo, opposite page). *Magswitch* also offers a unique guide that clamps anywhere you want on the table using switchable magnets (above). You'll find sources for all of these products on page 51.

By setting up your band saw properly with the right equipment, you'll be well on your way to creating thin stock and veneers with precision resaw cuts. W

SHOP-MADE SINGLE-POINT RESAW FENCE

If you only make an occasional band saw resaw cut, you can build your own single-point fence in the shop. The key component is the guide block that contacts the workpiece as you resaw. I rounded the front edge of this piece to form the single point. Then it's just a matter of adding a fence and base that fasten to your band saw table. These add stability to the guide block and give you a surface for clamping it down securely to the band saw table when it's in use.

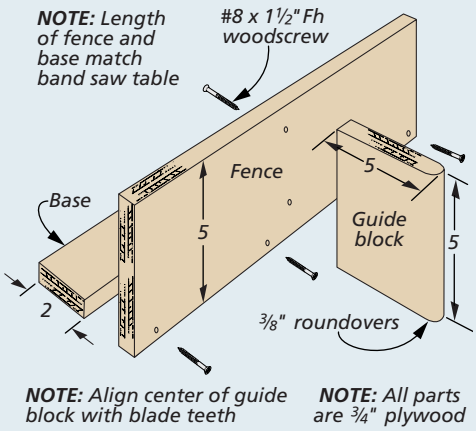

▲ A shop-made single-point resaw fence allows you to easily pivot the workpiece to adjust for drift.

choosing & using

Straightedge Guides

When it comes to cutting dadoes or breaking down boards in my shop, I usually rely on my table saw. But if I'm building a large project like a bookcase, the table saw isn't always the best choice. Large panels can be tricky to handle at the table saw. In these situations, I'll often turn to a circular saw for the parts breakdown and a hand-held router for the dadoes.

Of course, I still need a way to control the path of the tool in order to get an accurate cut. And that's where straightedge guides come into play.

AVAILABLE OPTIONS. There are a number of different types of straightedge guides, as well as accessories, available for your shop. The most common type is sometimes referred to as a "clamp and tool" guide, after one popular brand. It features jaws on the underside that clamp onto the workpiece as you tighten a lever. The low profile of the clamp allows you to use it easily as a tool guide.

Emerson Tools offers straightedge guides in several different sizes. And their guides feature some unique enhancements to the tool. First, you can outfit them with wide jaws that square them to the workpiece as you tighten the lever (above). Also, they're available with optional tool bases for a router or circular saw (opposite page). Each tool base has a key that runs in a track on the guide, preventing it from drifting away from the guide as you cut.

Of course, *Emerson* isn't the only manufacturer of this style of guide.

▼ Though the designs are different, both guides offer effective solutions for getting accurate cuts on large panels.

▲ Optional wide jaws for the *Emerson Clamp Guide* help to keep it square to the workpiece as you tighten the clamp.

I've listed some others on page 51. Straightedge guides of this type are available in lengths ranging from 24" to 100", depending on your needs.

Another interesting option is the *Straight Edge System* from *Rockler*. It comes with two 52" sections that can be used independently or joined together to make a 104"-long straightedge. Unlike the other guides, it features clamps that secure it to the workpiece from underneath (see the bottom left photo on the opposite page).

This shop-made setup block automatically positions and squares the guide the proper distance away from the cut line.

If you simply need to get the guide square to the workpiece, butt a speed square against it as you tighten the clamp.

STRAIGHTEDGE SETUP. With all these guides, you'll need to go through a simple setup routine before you begin cutting with them. I use a couple of aids to make this process easier. One thing to check before cutting, for example, is that the guide is truly square to your work. The narrow jaws of the guide, and the small amount of flex built into the jaws, means that the clamp won't necessarily be square when you tighten it. You can remedy this situation by placing a speed square against the edge of the guide as you secure it to the panel (above right). That way, you'll know that it's square.

If you need a dead-on accurate cut, then you'll have to clamp the straightedge in place to account for the offset between the edge of the guide and the cutting edge of router bit or saw blade. To simplify this, I made setup blocks for my circular saw and router. These blocks are sized to match the distance between the edge of the tool base and the edge of the bit or blade. I also added a cleat so that the block can be used to both position and square the straightedge guide in one easy step (above left).

If you work with a lot of large panels, then you'll surely find many uses for straightedge guides in your shop. It's also easy to make your own, as shown in the box below.

This universal router plate runs in a track in the *Emerson* guide to prevent the router from drifting away from the guide.

An optional plate for your circular saw will keep the saw running straight and true along the edge of the guide.

BUILD YOUR OWN STRAIGHTEDGE GUIDE

Rather than purchasing a straightedge guide, another option is to make your own. To do this, cut a hardboard base to the length you need and extra-wide. Then mount a fence to the top with glue and screws.

You trim the edges of the base with the tools you'll use with the guide. Here, for example, I cut one edge with a circular saw and the other with a router. (Note that the edge cut with the router will only work with the bit it's cut with.) Then I added a cleat to square the guide.

Once the guide is cut, the edge will line up with the cut line on your part (photos).

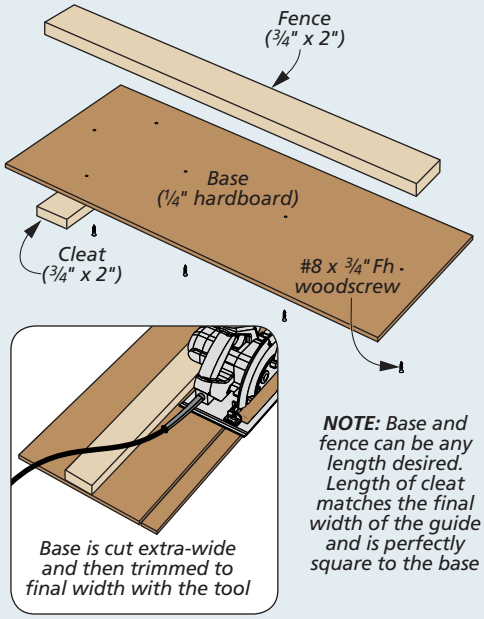

After you cut the base to width, the straightedge will automatically align the tool with the cutline for use.

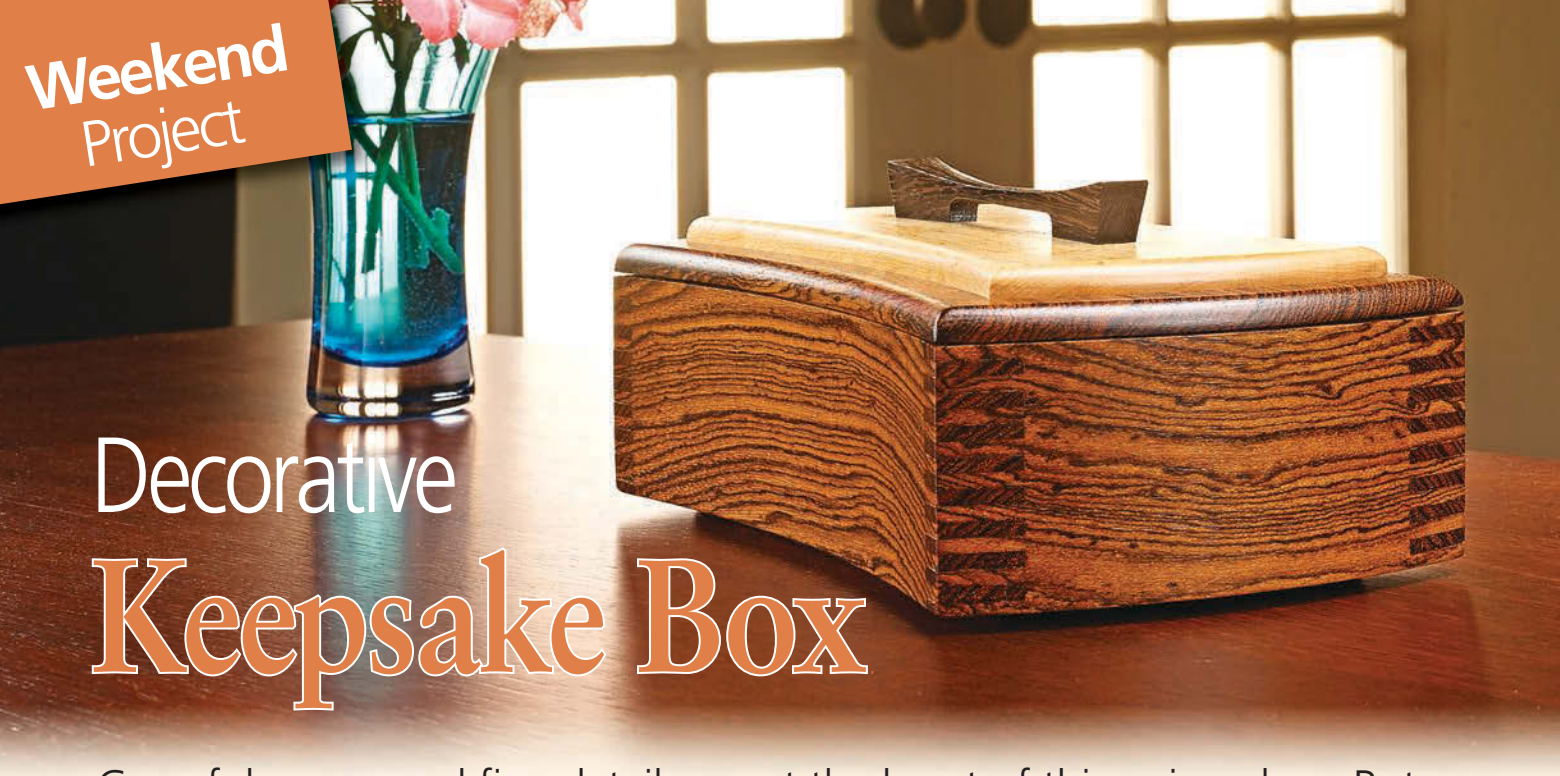

Weekend Project

Decorative Keepsake Box

Graceful curves and fine details are at the heart of this unique box. But don't be fooled by its looks — construction is easier than you think.

This time of year my mind turns towards gift ideas for the holidays. And nothing could be more appropriate than this beautiful keepsake box. Because it's so small, it's easy to splurge on highly figured or exotic wood without spending a fortune. The curved sides and ends add an interesting design element, too. And it's crafted with a snug-fitting capped lid to keep special collections and other treasures tucked neatly inside.

But perhaps the most interesting feature is the intricate-looking finger joints connecting the corners of the box. They appear wider on the ends than on the sides, but in reality, they're formed at the table saw while the box is square. The curved, profile cuts made later create this unique, asymmetrical illusion.

The box may appear complicated to build, but the construction is pretty straightforward. The key to success, as is the case with most small projects, is paying close attention to the details. I recommend making test cuts on less expensive stock for each operation.

FINGER JOINT BOX

As I mentioned, the basic construction of the box consists of the finger joints at the corners. A groove in each side and end piece accepts a tongue cut on the box bottom. The bottom extends below the sides and ends to give the box the appearance of floating when sitting on a flat surface.

THE SETUP. Begin by cutting the four pieces to size for the box sides and ends. I let these pieces run a little long and wide. Any excess material gets cut away later when the box is shaped.

Materials, Supplies & Cutting Diagram

A	Sides (2)	$\frac{3}{4}$ - $2\frac{1}{8}$ x 8
B	Ends (2)	$\frac{3}{4}$ - $2\frac{1}{8}$ x 5
C	Bottom (1)	$\frac{3}{8}$ - $3\frac{3}{4}$ x $6\frac{3}{4}$
D	Lid (1)	$\frac{3}{8}$ - 5 x 8
E	Lid Cap(1)	$\frac{3}{16}$ - $3\frac{5}{8}$ x 7
F	Handle (1)	$\frac{7}{16}$ - $\frac{1}{2}$ x $4\frac{3}{16}$

- (2) $\frac{1}{8}$"- dia. x $\frac{13}{16}$" Dowels

$\frac{3}{4}$" x $5\frac{1}{2}$" - 48" Bocote (1.8 Bd. Ft.)

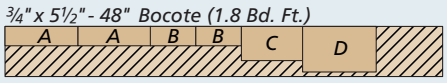

$\frac{3}{16}$" x 4" - 12" Birdseye Maple

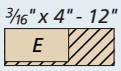

NOTE: Parts C and D are planed to $\frac{3}{8}$"-thick

$\frac{1}{2}$" x 1" - 6" Wenge

How-To: CUT FINGER JOINTS

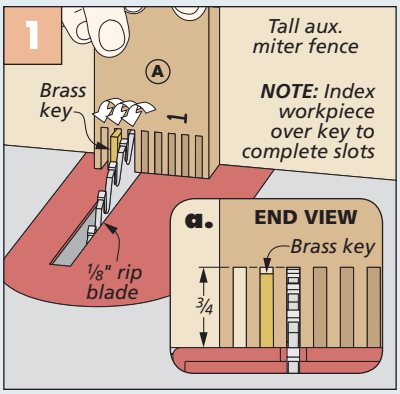

Cutting the Sides. "Hop" the workpiece over the brass key to cut each successive finger joint slot.

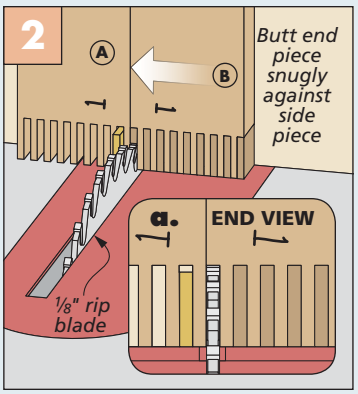

Cutting the Ends. Use a side piece as an index to register the first slot in the end pieces.

To cut the slots at the table saw, a simple jig is needed to support the workpieces. Shop Notebook on page 31 shows the details for making this jig. Make sure the index key used for the jig is shorter than the final length of the fingers. This keeps the workpieces from bottoming out on the key as the slots are cut (Figure 1a, opposite page).

Also, since the finger joints are ⅛"-thick with ⅛"-wide spaces in between, you'll want to use a full ⅛"-thick rip blade that has flat-top teeth to form the slots. The flat ground teeth leave a smooth-bottom groove. This ensures a nice, tight joint when the sides and ends are glued together.

MAKE THE CUTS. Figure 1 on the opposite page shows how to cut the slots on the side pieces. Start by butting one piece against the key and snug to the fence, then make the first pass. "Hop" the workpiece over the key to cut the next slot. With the slots completed on one end, flip the workpiece end-for-end and make the cuts on the other end.

Use one of the side pieces as a spacer to position one end piece against the auxiliary fence (Figure 2, previous page). Make the first cut, then remove the side piece and continue cutting the slots as before. Now, rip the pieces to final width so that the sides begin and end with a full-thickness finger and the ends have a full-width slot.

GROOVE FOR BOTTOM. Next, adjust the saw blade height to cut the groove in the inside face of each side and end piece (Figure 1, at right). This groove houses a tongue cut on the bottom panel. The rip fence provides proper spacing.

BOTTOM & RABBET. I cut the bottom panel to size at the table saw. Use a narrow dado blade buried in an auxiliary rip fence to rabbet the underside of all four edges (Figure 2). This forms the tongue that fits into the box sides and ends. Using a sanding block, round over the rabbeted edges of the bottom, as shown in detail 'a,' above.

ASSEMBLE. All that's left is to dry fit all of the parts. When everything fits well, glue the box together (Figure 3). A couple of clamping cauls at each corner allows the finger joints to close tight. After removing the clamps, glue the plugs in place to cover the exposed ends of the groove (detail 'b,' above).

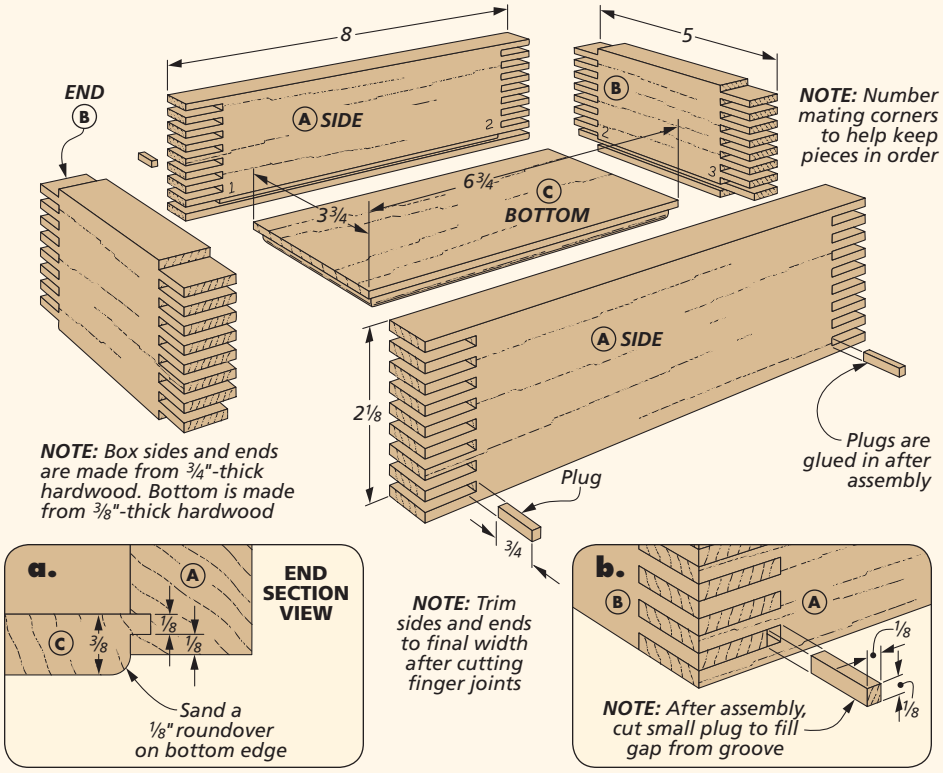

How-To: CUT GROOVE, RABBET & GLUEUP

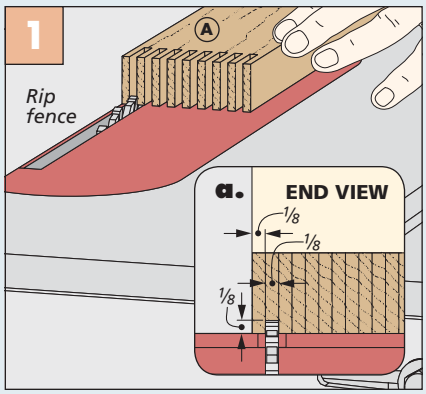

Cutting Groove. A groove on the inside face of the sides and ends houses the tongue on the bottom.

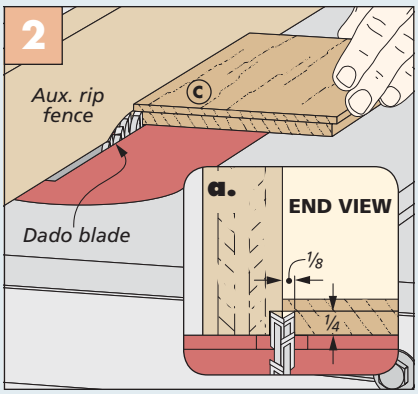

Rabbeted Bottom. A dado blade buried in an auxiliary rip fence makes quick work of the rabbet.

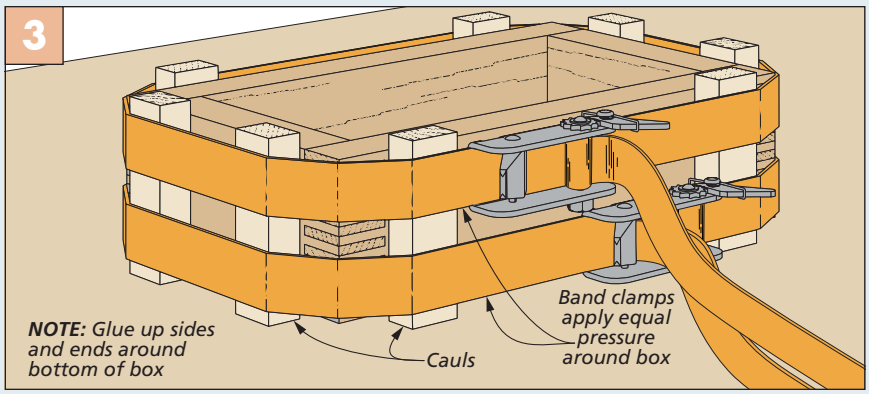

Glue & Clamp. With the bottom in place in the grooves, use a couple band clamps to hold everything together while the glue sets up. The cauls apply clamping pressure next to the joint, but not directly over it.

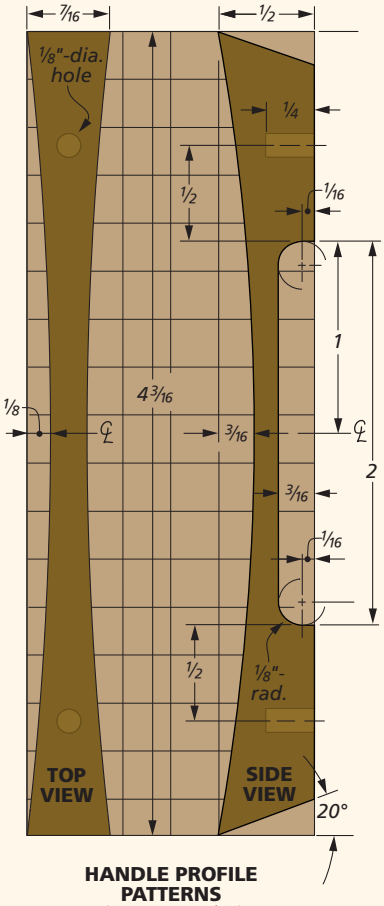

HANDLE PROFILE PATTERNS
(1 Square = 1/4")

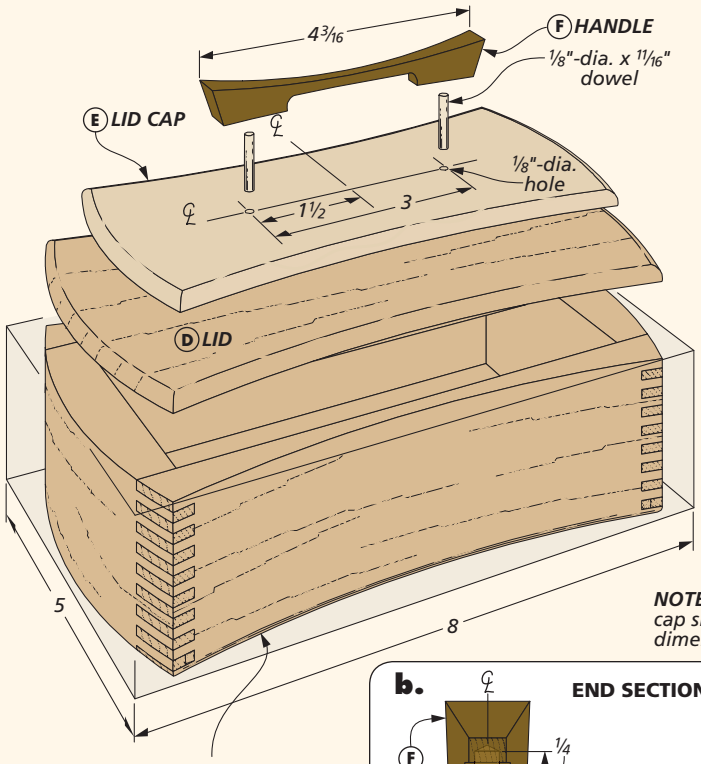

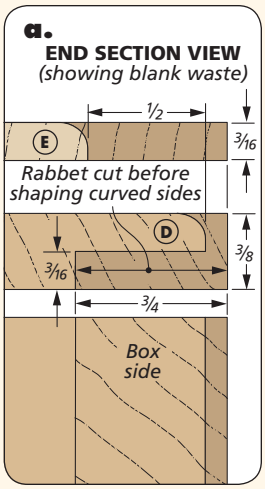

NOTE: Blanks for lid and lid cap should match overall dimensions of box

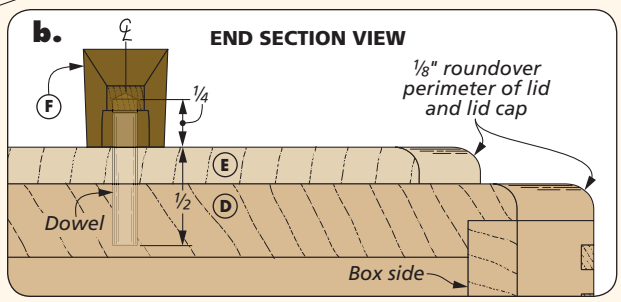

Adding the LID & HANDLE

With the basic box completed, it's time to turn your attention to making the lid assembly. It consists of two parts. The bottom portion of the lid is rabbeted on the underside for a snug fit in the box. Then a lid cap is glued on top of the lid. Here, a highly figured piece of wood (like the birdseye maple shown on page 14) can really complement the overall look of the box.

After completing the lid parts, the lid assembly and box will be held together and cut to their final shape at the band saw. The detailed handle tops it all off.

LID & CAP. Begin by cutting the blanks for the lid and lid cap to size. Both blanks start out the same size, but the lid blank is 3/8"-thick while the lid cap is only 3/16"-thick. Set the lid cap blank aside for now.

Next, I cut a rabbet around the bottom edges of the lid blank so it fit snugly in the box opening. To ensure a good fit, start by rabbeting the two opposing edges of the lid blank using an auxiliary rip fence and a dado blade in the table saw. Readjust the fence if necessary, and run the same two edges over the blade until they just slip into the box. You're aiming for a pretty snug fit at this point. Do the same for the two ends. A sanding block helps to fine-tune the fit and remove the saw marks.

DOWEL HOLES. Two dowels will be used to secure the handle to the lid. To drill the holes for these dowels, hold the lid and lid cap together with double-sided tape (Figure 2, at left). Carefully mark the hole positions and drill the holes.

How-To: LID RABBETS & DOWEL HOLES

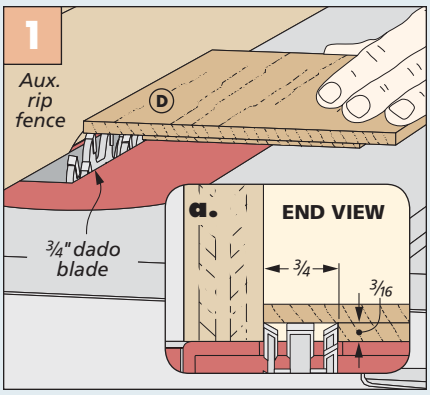

Rabbeted Lid. Sneak up on the final size of the rabbet in the lid. It should fit snugly in the box at this point.

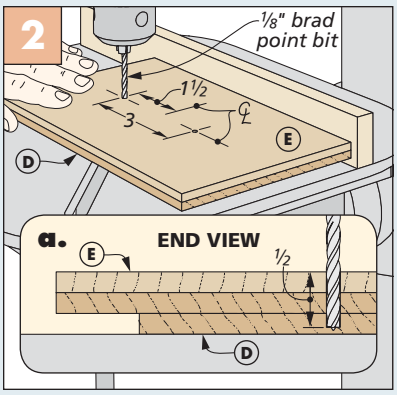

Dowel Holes. Double-sided tape holds the lid and lid cap blanks together while drilling the holes.

CURVES AHEAD. Now this project will really start taking shape. With the lid and cap blanks still held together with double-sided tape, follow the procedure shown in Figure 1 at right to lay out the curves on the ends and sides of the lid cap. I used a compass for the end curves and a gently flexed, thin strip of hardboard to trace the side curves.

With the lid assembly placed back on the box, move over to the band saw and cut everything to shape (Figure 2). Be sure to stay to the waste side of the layout line. The outside edges of the box are then easy to clean up with a large sanding drum in the drill press (Figure 3).

LID CAP. To add some visual interest to the box, the edges of the lid cap are offset from the edges of the lid and box. Figure 4 shows how I used a compass to scribe this layout line on the cap. Remove the double-sided tape holding the lid and cap together and head back to the band saw to cut the lid cap to its final size. Clean up the edges as before with a sanding drum in the drill press.

Before gluing the two lid parts together, you'll want to round over the top edge of both pieces. Detail 'b' on the opposite page shows what I mean. These edges are easy to round over at the router table. Next, I glued the two short dowels into the lid along with the lid cap. The dowels stand proud of the lid cap. They keep the two parts aligned and anchor the handle later on.

SHAPE THE HANDLE. Because the handle for the box is relatively small, I used an extra-long blank to keep my fingers well clear of the cutting operations. Figures 5 through 8, shown at right, walk you through the steps to bring it to shape.

The profile patterns on the opposite page get glued to the blank. Use the side view pattern first to form the ends of the notch on the bottom edge as shown in Figure 5. Remove the rest of the waste at the band saw. Next, locate and drill the holes for the dowels (Figure 6) and cut the curve on the top edge.

The top view pattern can then be used to cut the curves on both sides, as shown in Figure 7. After cutting the handle free from the blank (Figure 8), a light sanding will finish it off. A little glue is all it takes to attach the handle to the lid and dowels. I finished the box with two coats of lacquer to really make it shine. W

How-To: SHAPING LID, BOX & HANDLE

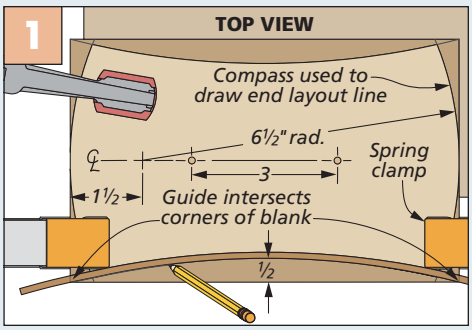

Layout Curves. A compass and a flexible hardboard guide strip work great to lay out the curves on the lid assembly.

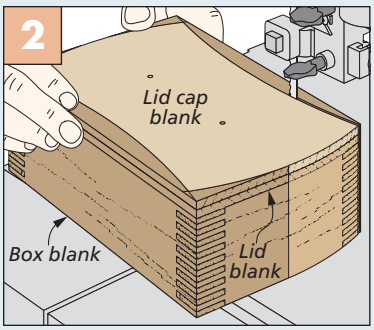

Shaping the Box. With the lid assembly nestled in the box, cut all four sides to shape.

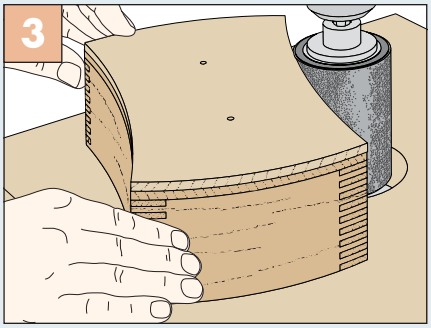

Sand Curves. A sanding drum in the drill press removes the band saw marks from the sides and ends.

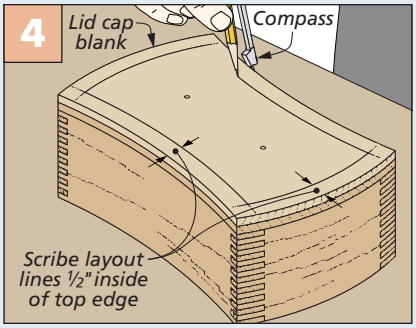

Offset Lid Cap. Use a compass and pencil to scribe the layout lines on the lid cap blank.

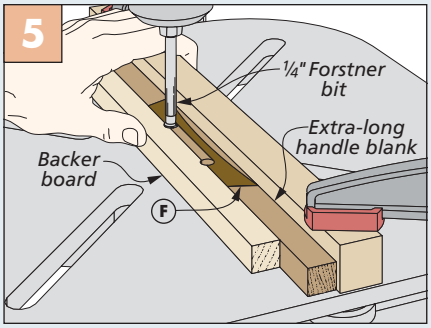

Handle Notch. Using a backer board, drill two holes in the handle blank to form the ends of the notch.

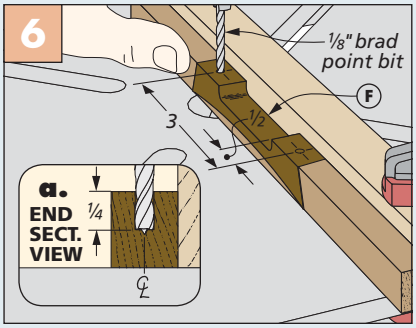

Drill Handle Holes. Lay out and drill the two holes for the dowel pins on the bottom of the handle blank.

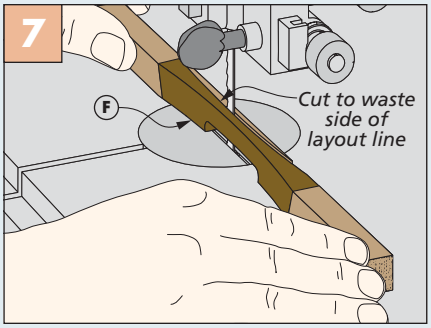

Side Profiles. Back at the band saw, cut the gentle curves on both sides of the handle blank.

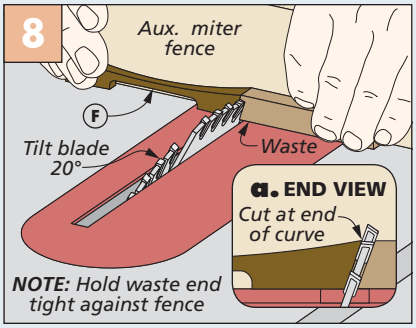

Beveled Ends. A bevel cut at both ends of the blank completes the final shaping of the handle.

Weekend Project

Curved Tray Centerpiece

Whether it's built as a gift project or for your own home, this gently sweeping curved tray is sure to look great with any decor.

Building small projects for decoration around the home can be quite satisfying. Consider this little weekend project idea: It's perfect as part of a holiday display, or it can be arranged with candles and glass beads like we've shown above. Either way, it's sure to be a hit when entertaining. And it won't take a huge time commitment to complete.

At first glance, the tray appears to be "carved" from one solid piece of thick stock. But actually, we came up with a clever way to cut out the three parts for the tray from one 12/4 blank of white oak. We then shaped each section and glued them back together. The finished product is sure to leave your guests wondering how you made it.

MATERIAL SELECTION. Where I live, finding lumber this thick is not a problem. However, if that isn't the case where you're located, try an online lumber supplier. I've listed a couple of suppliers in Sources on page 51. Another option would be to simply use a 1½"-thick blank for the top and body and a separate piece for the bottom.

How-To: RESAW & SURFACE BLANK

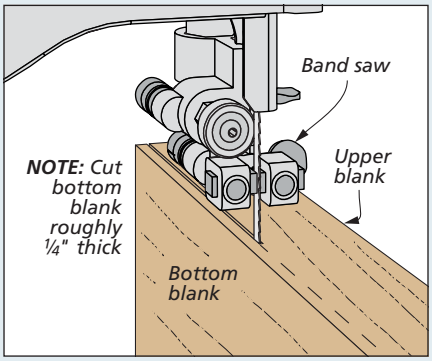

Resaw Bottom. Use the band saw to cut the blank for the bottom free from the workpiece blank.

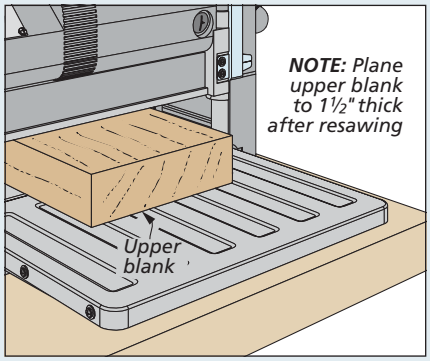

Plane Upper Blank. Run the tray's upper blank through the surface planer after removing the bottom panel.

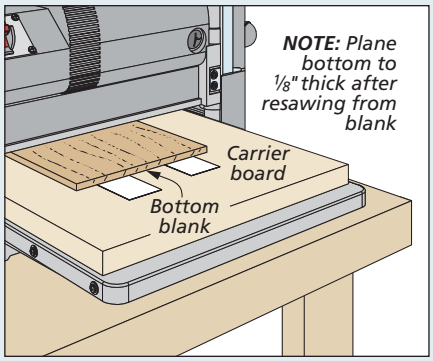

Resurface Bottom. Double-sided tape holds the bottom blank to the carrier board for the trip through the planer.

RESAW & SURFACE. Once you obtain the lumber for the project, the first step is cutting the blank to width and length (drawing at right). Now, resaw a thin piece off one face for the bottom as shown in the lower left box on the previous page. Then the freshly sawn surfaces of the remaining upper blank and the bottom blank will need to be surfaced smooth again.

The thick, upper blank can simply be run through the planer to bring it to final thickness (middle drawing, opposite page). But since most surface planers have a minimum planing depth of around ⅛", it's a good idea to use a simple carrier board to support the thin, bottom blank on its trip through the planer (right drawing, previous page). The bottom blank can then be set aside.

MAKE THE TEMPLATE. For the next several operations, a simple template is needed (Figure 1, at right). This template helps create the opening for the center of the tray, as well as providing a surface for a flush-trim bit to ride against to smooth the walls of the opening. Turn to Shop Notebook on page 31 for the template dimensions and construction details.

TRACE THE OPENING. After the template is complete, place it over the upper blank as shown in Figure 1 at right. The cleats on the template should fit snugly around the workpiece. Now trace the center opening onto the workpiece.

SHAPING THE CENTER OPENING. Remove the blank from the template and step over to the drill press to drill holes at all four corners (Figure 2). Make sure each hole is just to the inside of the layout line. These holes make it easy to insert the blade of a jig saw to complete the cuts for the opening, as shown in Figure 3. Again, stay inside the layout lines when cutting the rough opening.

FLUSH TRIM. Now that the opening of the tray is roughed out, set the workpiece back in the template. Install a 2"-long flush-trim bit in the router and make a pass around the inside edge of the tray opening (Figure 4). Be sure that the bearing rides against the template edge.

When routing an inside opening, always move the router in a clockwise direction around the workpiece. This ensures that you rout in the direction against the rotation of the bit, giving you more control through the entire cut.

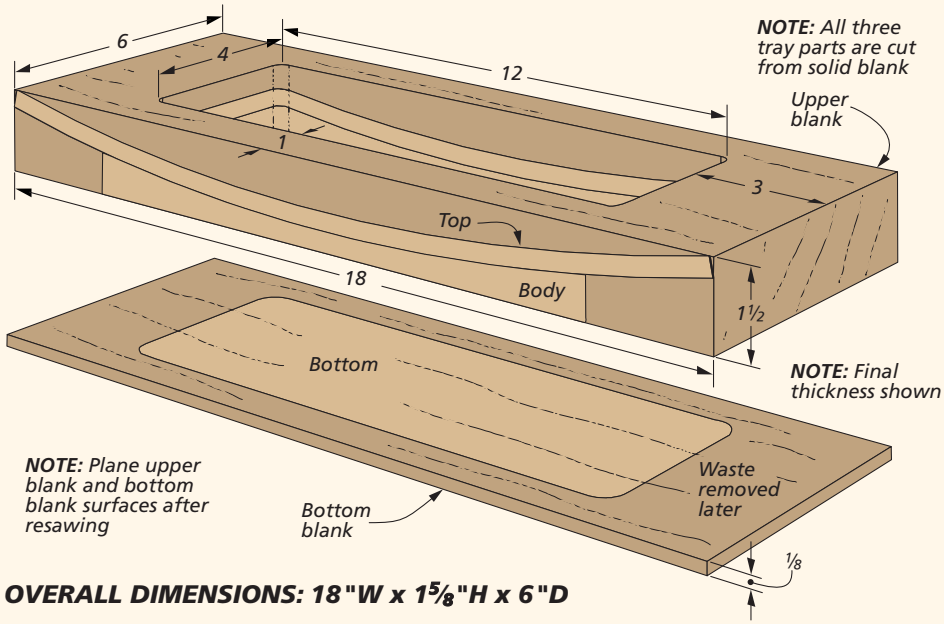

OVERALL DIMENSIONS: 18"W x 1⅝"H x 6"D

SIDE VIEW

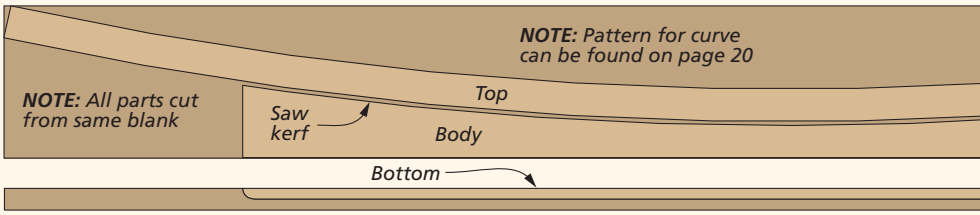

How-To: SHAPE THE CENTER OPENING

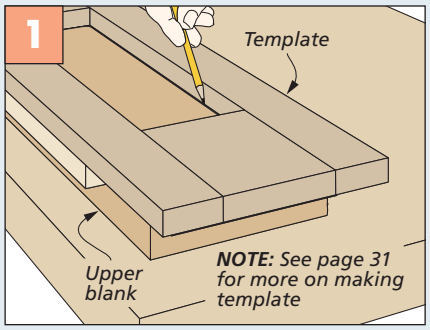

Trace Opening. Set the template over the upper blank and trace the center opening onto the workpiece.

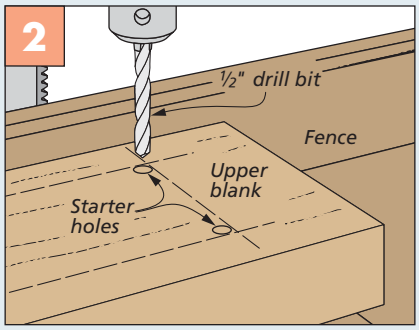

Drill Holes. Drill a starter hole at each corner. This allows room for a jig saw blade to fit through.

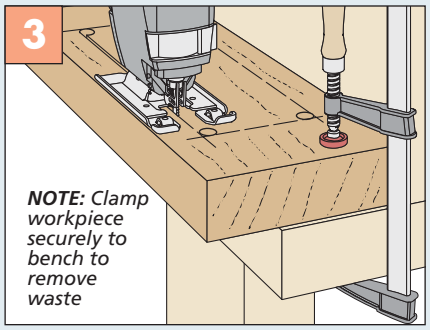

Cut Opening. Use a jig saw to connect the four corners and remove the center opening waste.

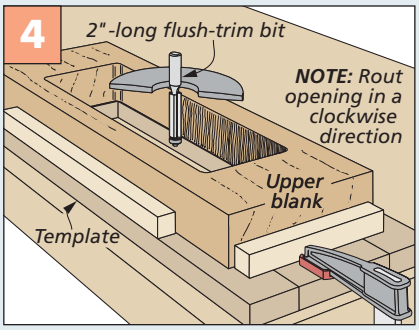

Trim Opening Flush. With the blank back in the template, use a flush-trim bit to clean up the sides.

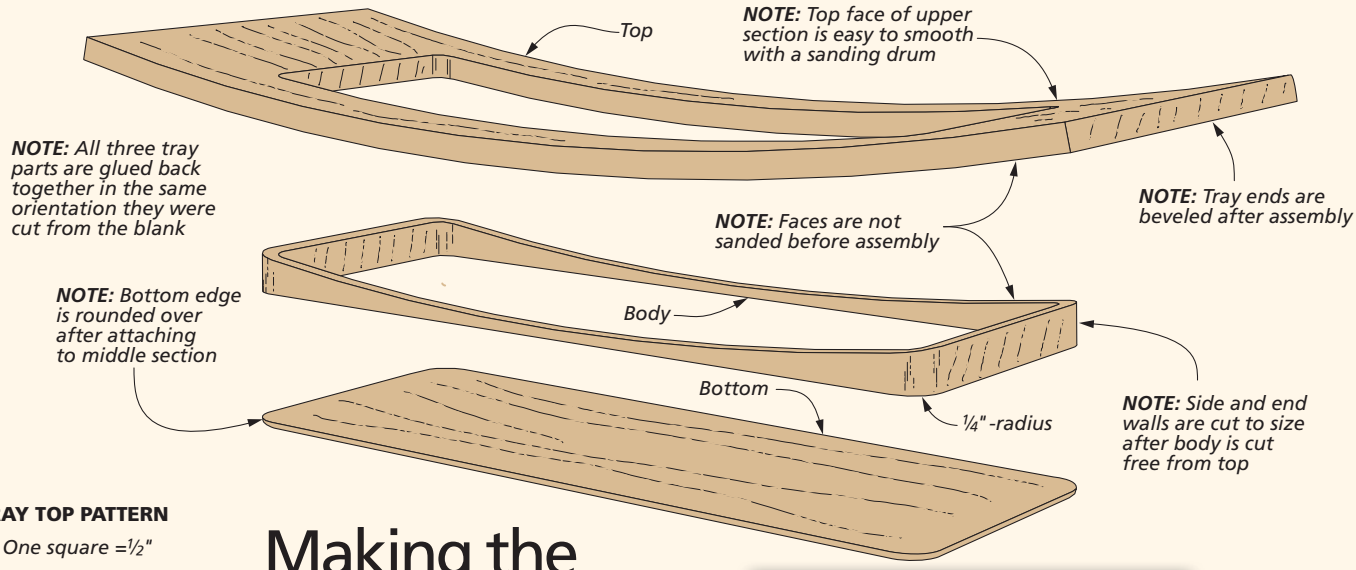

TRAY TOP PATTERN

One square =½"

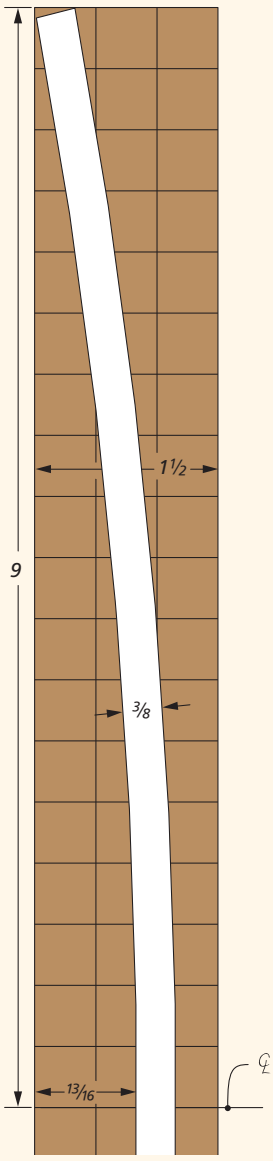

Woodsmith GO ON-LINE EXTRAS

For full-size tray pattern, go to Woodsmith.com

Making the CURVES

With the tray opening cut to shape in the upper blank, you're making good progress. But there are still a few cuts to make before it will resemble the finished product. The top and body sections of the tray need to be cut apart. This allows you to add the bottom blank back to the assembly, as well as form the side walls of the tray. This process starts with some curved cuts at the band saw.

TWO CURVES. As I mentioned before, the remaining upper blank is used to make the top and body portions of the tray. To separate these two parts for further shaping, you'll first need to lay out the curves on the edge of the upper blank. The pattern at left can be enlarged and traced onto the workpiece.

With the pattern marked, move over to the band saw and raise the guide post until the workpiece just passes underneath it when standing on edge. Then lock the guide post in place. Start by making the top curve cut first, as shown in the upper drawing at right.

To keep the workpiece stable while making the second curve cut, I used a few pieces of masking tape to reattach the waste piece from the first cut back to the workpiece blank. I then made another pass through the band saw to separate the top and body sections of the tray (middle drawing). Since these parts will eventually be glued back together, make this cut with the blade right on the layout line.

BOTTOM ASSEMBLY. Now glue the body section of the tray to the bottom blank that was cut to size earlier. Be sure to

How-To: CUT CURVES

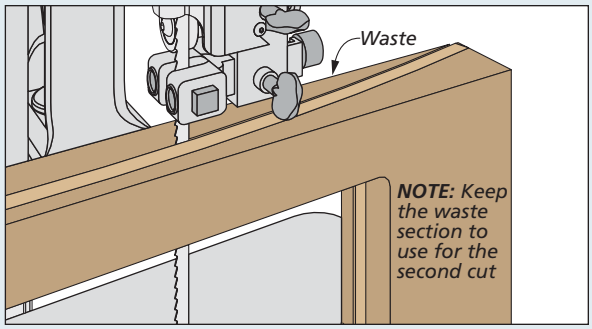

Top Curve First. A slow and steady feed rate will give you the best results when making the first curved cut. Stay just outside the layout line.

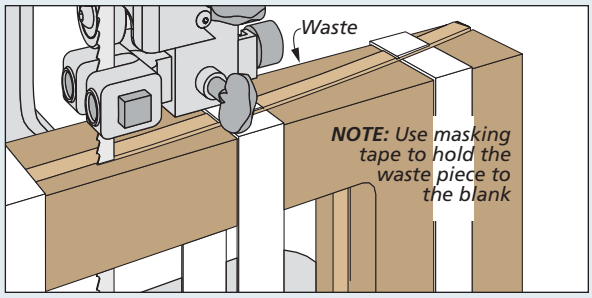

Cut Lower Curve. For added stability, use double-sided tape to attach the waste piece from the first cut back to the blank. Make the second curve cut.

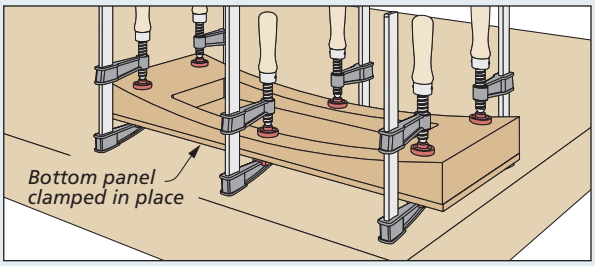

Attach Bottom. Bar clamps work well to hold the bottom in place while the glue sets up. Be sure to keep the edges and ends of the two parts aligned.

keep the grain patterns running in the same orientation. Use plenty of clamps to hold these two parts together (lower drawing, previous page).

TRIM SIDE WALLS. Now that the bottom panel is married back up to the middle section, the bottom half of the tray can be formed. This process starts by using a marking gauge or compass to trace a line ¼" around the perimeter of the opening using the inside edge as a guide.

You'll head to the table saw to cut away the waste and form the perimeter of the bottom assembly, as shown in Figure 1 at right. After cutting the assembly to size, spend a little time sanding the side and end walls and rounding the outside corners. These are difficult to sand after the bottom assembly is attached to the top. A sanding block works well for this.

ROUNDOVER BOTTOM EDGE. I also made a trip to the router table to round over the bottom edges of the assembly (Figure 2). Removing the sharp corners from the bottom edge allows the tray to slide on a table without scratching the surface or snagging on a tablecloth.

ASSEMBLE THE TRAY. Bringing the tray parts back together for the final assembly is not difficult. But it does require a little patience. Again, you'll want to make sure that the grain direction of the two halves is running in the same direction as when they were separated.

The biggest challenge you'll face when assembling these parts is keeping the interior side walls lined up. To help keep everything aligned, I used a couple of scrap blocks cut to the same size as the opening in the tray (Figure 3). Wrapping these alignment blocks in waxed paper keeps them from getting glued to the tray.

BEVEL THE ENDS. All that's left to complete the tray is to bevel the ends. The table saw and a sharp crosscut blade work well to complete this process. I wrapped a piece of masking tape all the way around both ends to prevent any tearout as the cuts are made (Figure 4).

SAND & FINISH. Spend a little time sanding joint lines and surfaces, and this project is ready for some finish. I opted for one coat of *Minwax's Aged Oak* gel stain. I followed that up with a couple coats of lacquer. The tray is now all set to take its place at the table. And just in time for the holidays. W

How-To: FINAL SHAPING & ASSEMBLY

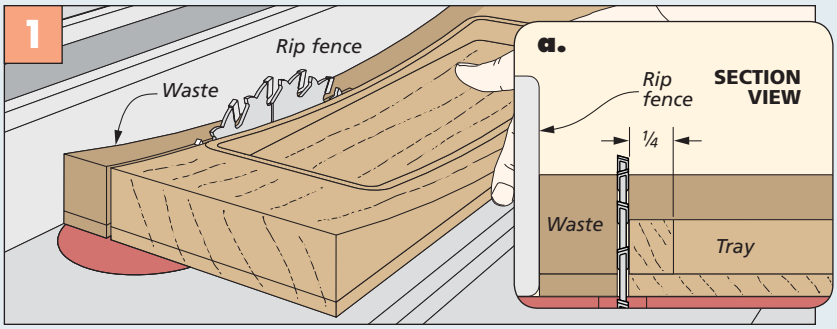

Forming the Tray Sides. Use the rip fence as a guide to remove the waste along the two long edges of the lower assembly. The ends can be cut using a miter gauge with an auxiliary fence attached.

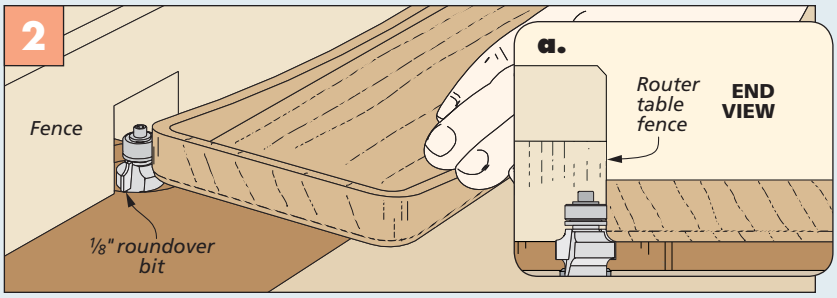

Round Over Bottom Edge. After sanding the sides and rounding the corners of the tray, use a ⅛" roundover bit in the router table to ease the bottom edges. The router bit bearing should be flush with the face of the fence.

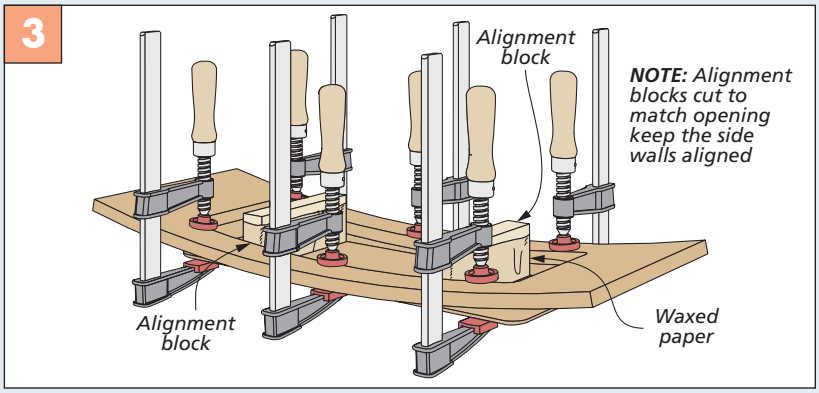

Clamp It Up. A pair of alignment blocks cut to the inside dimension of the tray opening work well to keep the side walls aligned. Be sure to wrap them in waxed paper to keep them from getting glued to the tray.

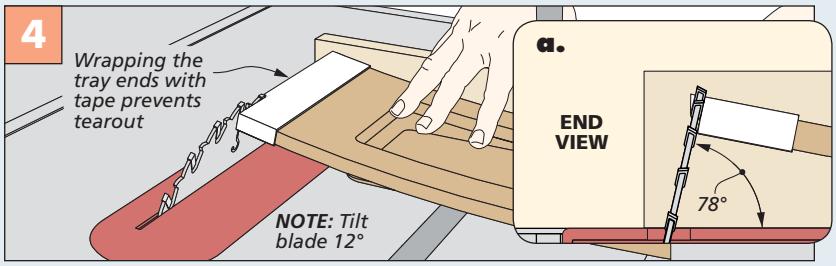

Beveled Ends. Bevel the two ends of the tray as shown above. This leaves them "square" to the tray's curved surface. Wrap the ends in several layers of masking tape to avoid any tearout as the bevel cuts are made.

Heirloom Project

Cherry Dining Table

This elegant table is sure to serve your family for generations to come. It's a worthy centerpiece for our new set of dining room furniture.

A shop-built set of dining room furniture is on the bucket list of many woodworkers. What stops many of them from moving forward on the goal is the perceived difficulty of the projects. It's certainly a set of furniture where you want flawless, great-looking results.

This latest dining room set (drawing, opposite page), aspires to make these heirloom pieces more achievable. The look is high-style, but the techniques are well within the range of any woodworker.

DINING ROOM CENTERPIECE. The key component of any dining room set, of course, is the table. You want it to look great, be rock-solid, and also be expandable for entertaining guests. This table checks off all three of these boxes, while also providing a construction process that's possible to accomplish over the course of a few weekends.

DETAILS OF THE DESIGN. The table base is made from solid cherry parts, which contributes to both the sturdiness and style of the table. And several high-quality hardware components like leg braces, leaf locks, and table extenders simplify the construction while also making the table quite strong.

The table is topped with an elegant cherry veneer. If you've never used veneer in a project before, don't worry. This top features a paper-backed veneer that's easy to work with. You'll find all the details for getting great results over the next few pages.

Construction Overview / OVERALL DIMENSIONS: 42"W x 30"H x 64"L (without leaf) 42"W x 30"H x 82"L (with leaf)

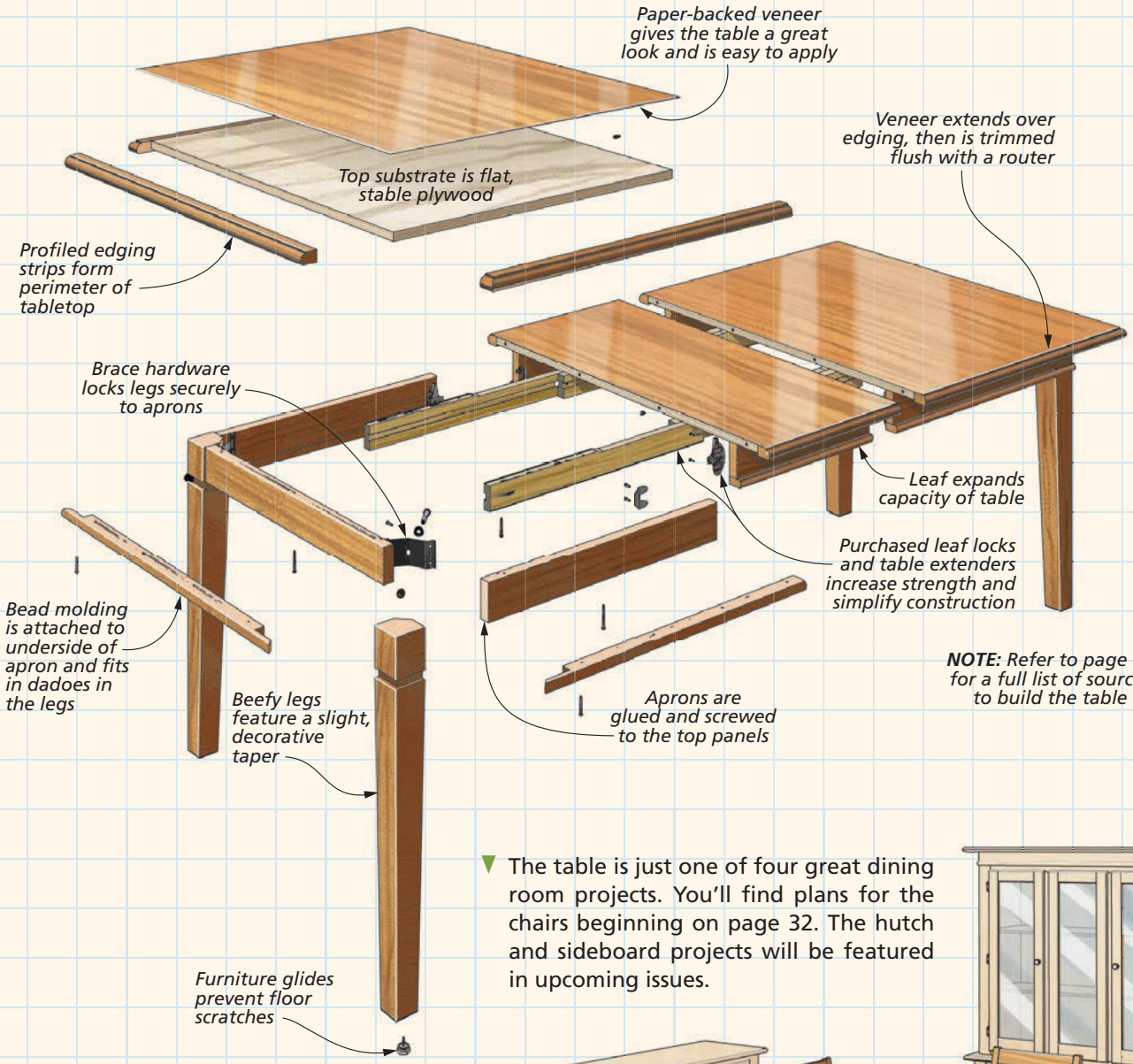

NOTE: Refer to page 51 for a full list of sources to build the table

▼ The table is just one of four great dining room projects. You'll find plans for the chairs beginning on page 32. The hutch and sideboard projects will be featured in upcoming issues.

▲ The extra leaf locks seamlessly in place to expand the capacity of the table when guests arrive.

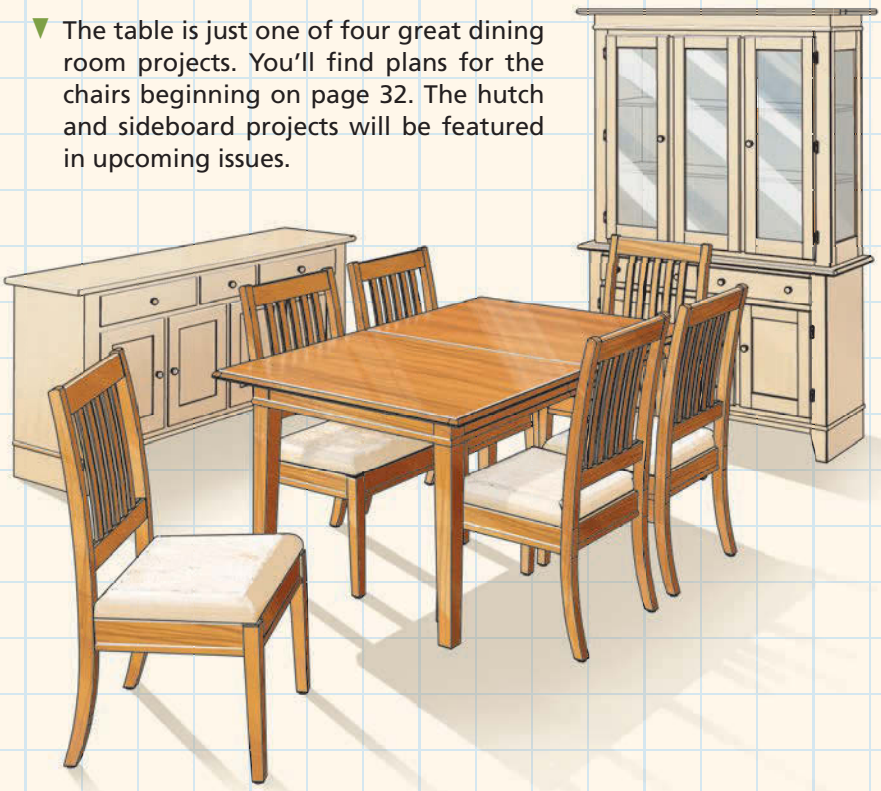

Make the LEGS

As with most table projects, the best place to start work on this dining table is at the bottom. And that would be the four thick, cherry legs.

STOCK SELECTION. At 2¾" square, these legs are certainly beefy. And they need to be to form the foundation for a sturdy dining table. Now, it's possible to glue together thinner boards in order to create a blank of this thickness. The only problem with this approach is that the difference in grain pattern between the glued-up boards may be noticeable, no matter how carefully you choose your stock.

To avoid this problem entirely, I took a different direction in choosing stock for these legs. I made them out of cherry turning blanks instead. You can find the source for the blanks on page 51. Then plane them to final thickness and width and cut them to length at the table saw.

BEGINNING THE CUTS. The good news about the table legs is that they are all identical to one another. That means you don't have to worry about making any confusing "mirror image" cuts as you work on each of the legs. But there are a lot of cuts to make, so a good step at this point is to lay out and mark the cuts on the legs carefully to keep them all straight.

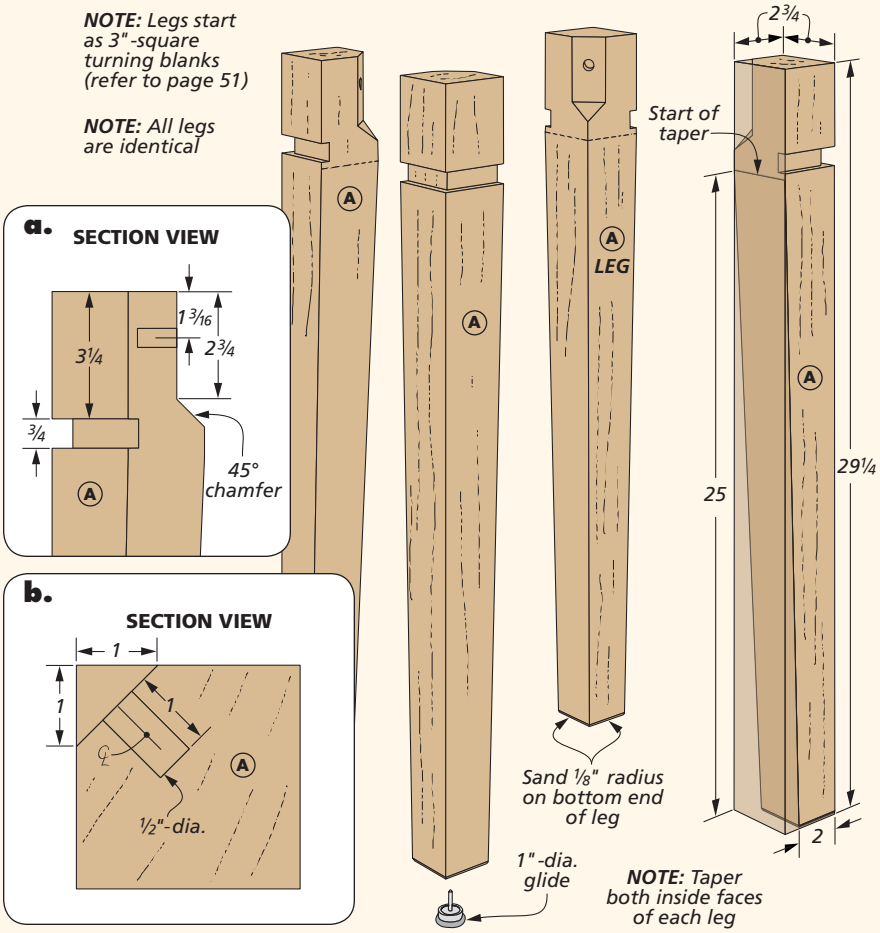

DADOES FIRST. The first detail that I addressed is the two dadoes that wrap around the outer faces of each leg. Later on, these dadoes accept strips of bead molding that add a decorative detail to the table.

The dadoes are easy to cut as shown in the left drawing below. Since you're not cutting all the way through the leg, you can simply use your rip fence here as a stop to establish the location of the dadoes. Also, be sure to back up the cut with a wood auxiliary miter gauge fence to prevent any tearout.

Once you cut one of the dadoes, simply rotate the leg 90° and repeat

How-To: SHAPE THE LEGS

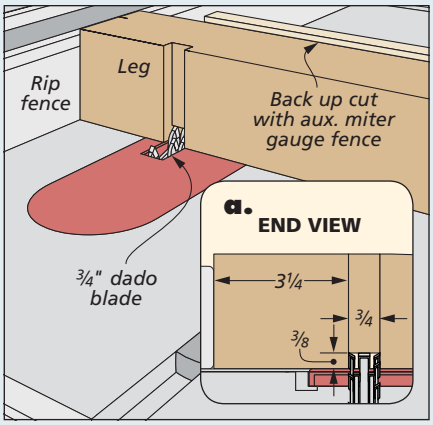

Dadoes. A dado blade in the table saw makes quick work of the two dadoes near the top end of each leg.

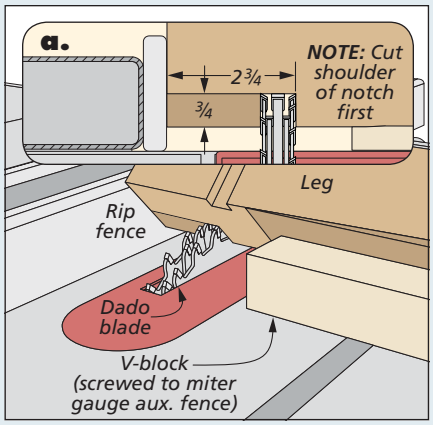

Corner Notch. Cradle the leg in a block with a V-notch in it, and use a dado blade to trim the corner notch at the top.

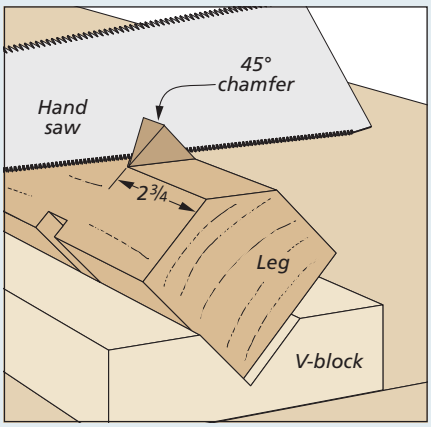

Hand Trim Chamfer. Relieve the sharp edge of the corner notch by cutting a chamfer with a hand saw.

the process in order to cut the second dado. Now cut the dadoes on the other three legs, as well.

CORNER NOTCH. The next procedure on the legs also requires a dado blade on the table saw, but you'll need to add another shop-made accessory to your miter gauge fence. And that's a V-block, a 2x6 scrap with a V-shaped groove cut in one face.

As you can see in the lower middle drawing on the opposite page, this setup lets you cradle the corner of each leg as you pass it over the blade to create the 45° corner notch. You'll need to make a series of passes over the dado blade to complete each notch.

Once the corner notch is complete, cut a chamfer at the bottom of it to ease the sharp edge of the notch. This is easy to accomplish with a hand saw, as shown in the lower right drawing on the opposite page.

DRILL PRESS. For the next steps on the legs, you'll move from the table saw to the drill press. That's because you need to drill a hole near the top end of each leg. This hole is used to secure the leg to the leg brace later on.

The hole is on the angled notch you just cut on the leg, so you'll want to move the V-block from the table saw to the drill press. Use it to cradle each leg as you drill the hole (Figure 1).

While you're there, the drill press is also useful for installing the threaded insert in the hole. By using the drill press (with it unplugged), you can be sure the insert threads straight and true into the hole. Figure 2 at right shows the details of the setup.

TAPERS. Next, you'll return to the table saw to cut tapers on the two inside faces of the legs. As you can see in Figure 3, I created a jig to hold the leg at the proper angle while passing it through the blade. (You can find the details of this jig in Shop Notebook on page 30.) Simply rotate the leg to cut the second taper.

COMPLETING THE LEGS. A shallow counterbore on the bottom of each leg holds a metal furniture glide. I carefully laid out and drilled these holes by hand, as shown in Figure 4. Then it's just a matter of softening the bottom ends of the legs with sandpaper to round the edges and prevent chipping.

How-To: LEG HOLES & TAPERS

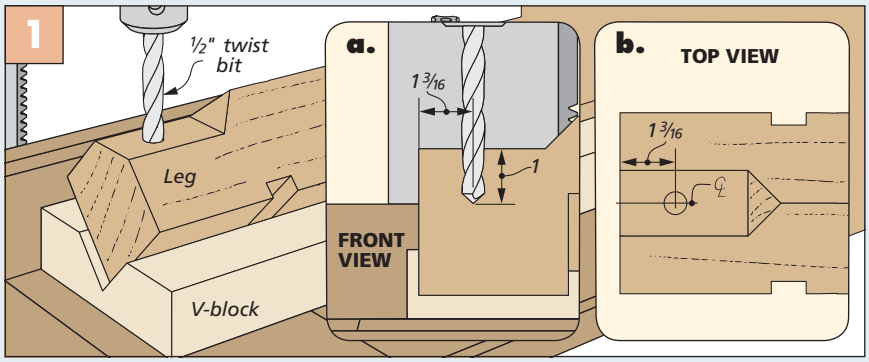

Drill Mounting Hole. Each leg has a pilot hole for a threaded insert that's positioned within the corner notch. To drill the hole accurately, move the V-block you made previously to the drill press in order to hold the leg.

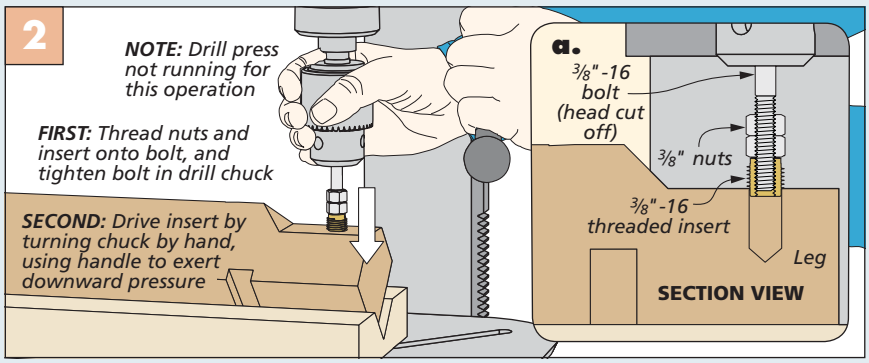

Threaded Inserts. Thread a couple of nuts on a bolt, and tighten it into the chuck on the drill press. Add the threaded insert, and turn the chuck by hand to drive the threaded insert straight and true into the pilot hole in the leg.

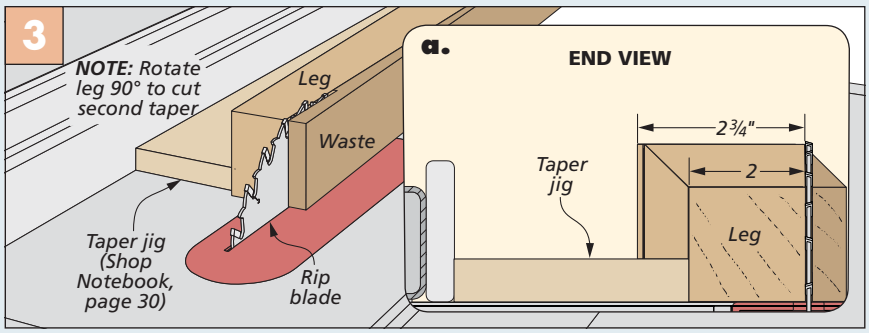

Taper Cuts. This simple plywood jig holds the leg at the proper angle for cutting the taper on the inside faces. After the first cut, rotate the leg to cut the taper on the other inside face.

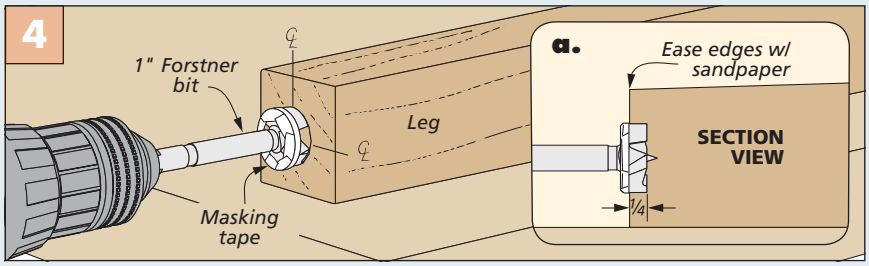

Counterbore for Glide. A shallow counterbore on the bottom of the leg accepts a furniture glide. Drill this carefully by hand, using some tape on the bit to indicate the depth and alert you when to stop drilling.

Assemble the TOP & APRON

Often when building a table, you'll complete the base before moving on to the top. But in this instance, you need to use the top as a mounting point as you assemble the base of the table. So for that reason, you should now turn your attention to the top of the table.

TOP DETAILS. The top is made up of three plywood panels: two larger side panels and one center leaf panel. Cut all these to final size now. Later on, you'll add veneer to these panels. But you'll be leaving them upside down during this assembly process, so it's best to save veneering them for later to avoid any potential damage to the veneer.

The top panels are held together by alignment pins and sleeves that are press-fit into mating holes in the parts (details 'a' and 'b'). It's helpful to lock the top parts together for assembly, so add the pins and sleeves now.

To do this, mark parallel lines across the joints between the sides and leaf. Then transfer these marks to the edges of the parts. Precision is key for the mating holes for the pins and sleeves, so use a doweling jig to drill the holes straight and accurately. The details are covered in Figure 1 below.

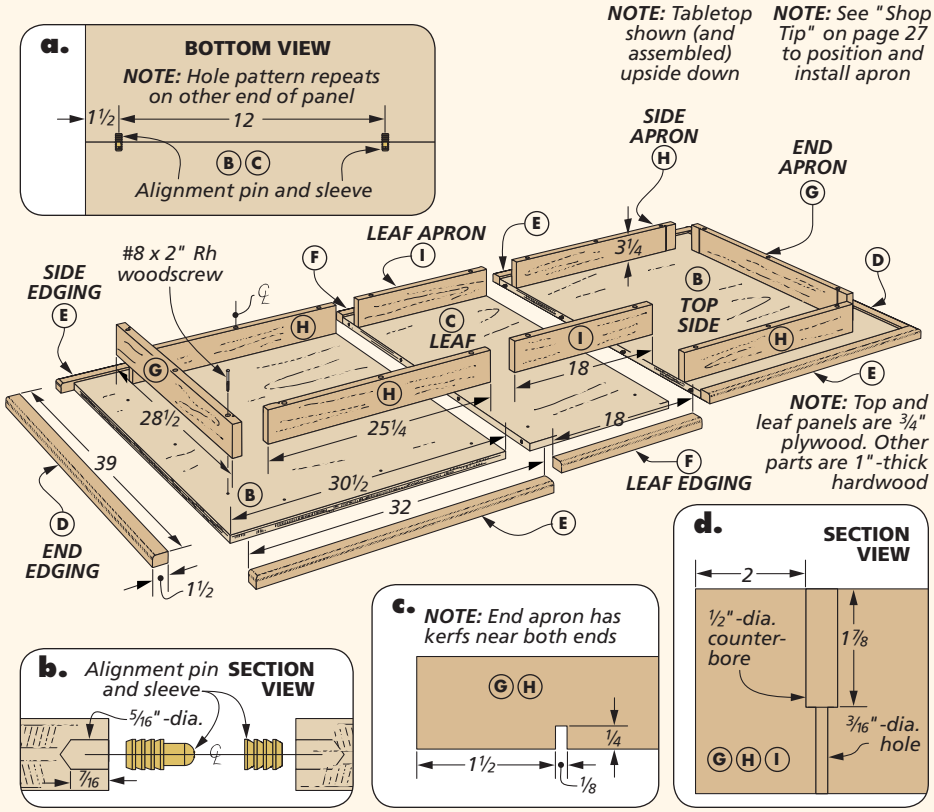

How-To: TOP & APRON

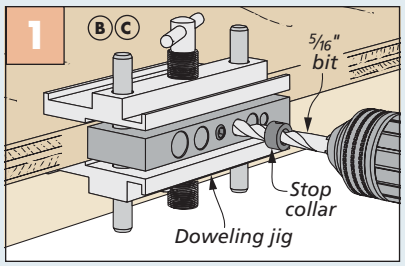

Drill Holes. A doweling jig ensures precise holes for the alignment pins and sleeves in the top panels.

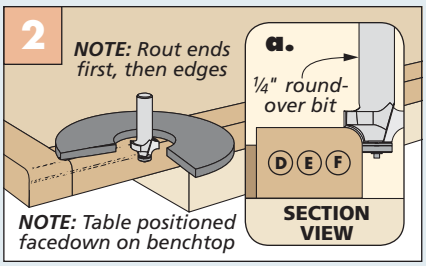

Rout Edge. After installing the strips of edging, use a hand-held router to cut a roundover around the perimeter.

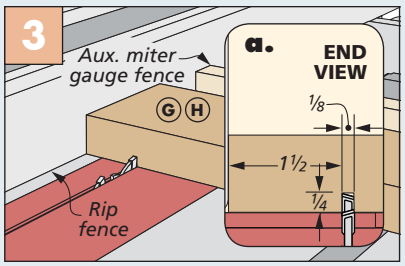

Kerfs. Use a standard table saw blade to cut kerfs on the apron parts to hold the leg braces.

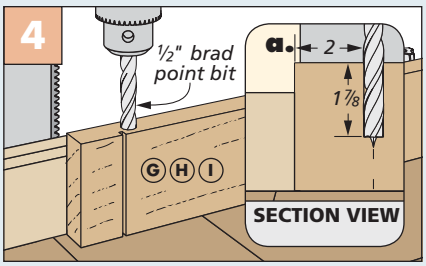

Counterbore. Deep counterbores that are centered on the apron parts accept screws later. Drill them at the drill press.

ADD EDGING. The top panels are wrapped with solid cherry edging strips. These 1"-thick strips align flush with the top face of the table, but they overhang the bottom edge.

It's easiest to glue and clamp the edging strips on now, while the tabletop is upside down and none of the apron parts have been added yet. This makes it easier to align the pieces flush with the top of the table and clamp across the parts to hold the edging.

The bottom outside edge of this edging is rounded over. You'll cut this roundover by running a hand-held router around the perimeter of the table after the glue on the edging has dried (Figure 2). I used a compact router, which can rest easily on the face of the edging without tipping.

One other note on routing this profile: It's important to rout the ends of the table first, and then move to the edges. That's because the end grain may chip out as you rout it. But this gets cleaned up when you rout along the edges of the table.

APRONS. The tabletop and leaf aprons are the next order of business. Get started by cutting the two end aprons, four side aprons, and two leaf aprons to size. The end aprons and side aprons also receive

kerfs near the ends. These kerfs lock in the braces that are used to attach the table legs. They can be cut at the table saw, as shown in Figure 3 on the opposite page. Note that the end aprons receive two kerfs, while the side aprons receive only one.

The last machining step for the aprons is a series of deep counterbored holes. These are used to secure the aprons to the underside of the top panels with screws (glue is also used for the assembly). Make them at the drill press as shown in Figure 4 on the previous page.

TABLE ASSEMBLY. Joining the apron parts and legs to the underside of the top panels is a little bit different process than you might be used to. Often, you'll have joinery like mortise and tenon joints to register these parts to one another, but that's not the case here.

The most important thing is that the apron parts be positioned accurately on the underside of the top panels before you secure them, not only to hold the legs but to align across the underside of the table. To help with this process, I cut a number of spacer blocks out of scrap stock to help position the parts accurately (Shop Tip below).

With the spacers all clamped in position, it's easy to align the aprons along the bottom panels, and also space them apart to account for the legs. Once you get it right, apply glue to the top edge of the apron parts, put them in place, and drive in the screws.

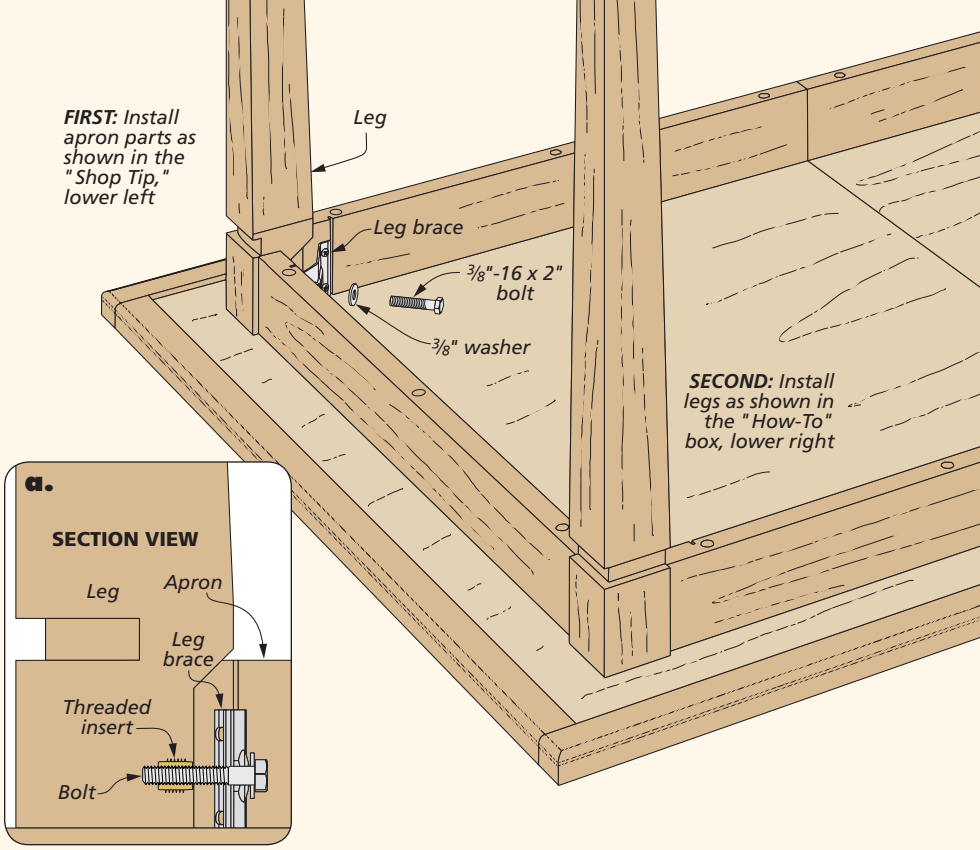

ADD THE LEGS. With the aprons secure on the underside of the tabletop, you can now add the legs to the assembly. They should fit between the aprons after removing the spacer squares.

The legs are secured with brace hardware. To install each leg, put the brace in place so the tabs on the ends slide into the dadoes in the aprons. Line up the hole in the brace with the threaded insert in the leg.

Start threading the bolts on by hand, and then use a ratchet and socket to snug them up tightly (Figure 1, below right). You might want to have a framing square handy to make sure the leg remains square to the tabletop as you tighten it. To prevent the leg from splaying out, take care not to over-tighten the bolt.

Once the leg is good and snug, it's time to secure the brace to the aprons. A few roundhead woodscrews are all you need to finish the job (refer to Figure 2 below).

At this point, the legs and aprons should be securely fastened to the underside of the table. On the next page, I'll add some bead molding to the legs and aprons that will further help lock everything in position.

Shop Tip: Apron Install

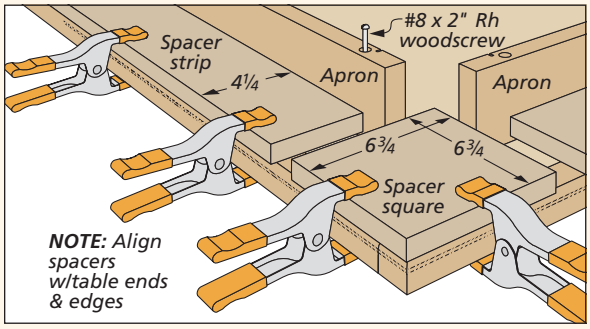

Spacer Blocks. *A series of spacer blocks position the apron parts properly for installation. Make squares for each corner, and longer strips for the ends and edges. Then clamp them in place before installing the aprons.*

How-To: INSTALL THE LEGS

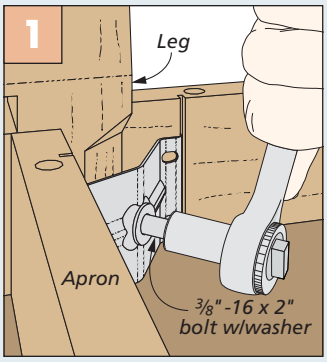

Attach Leg. Drive a bolt through the brace and into the insert in the leg.

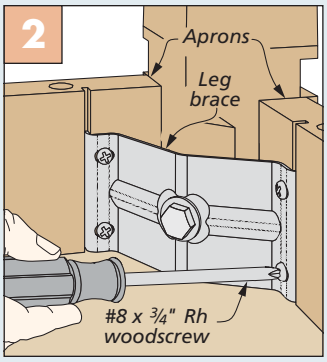

Brace to Apron. Secure the ends of the braces to the aprons with screws.

Finish up the DINING TABLE

With the legs and apron in place on the top, your upside-down assembly is starting to look more like a table. A few additional wood parts, hardware, and veneer will get you the rest of the way.

BEAD MOLDING. While the table is still upside down, it's a good time to add the bead molding. This molding serves a couple of purposes. It adds a decorative touch to the underside of the table, and it also helps to lock in the legs to add rigidity.

After ripping a number of strips for the bead molding, you can head to the router table to make the bullnose profile on the outer edge. This is a simple two-pass method with a roundover bit that's shown in detail 'c.'

Cutting the molding to fit nicely on both the apron and around the legs can get a little tricky. To simplify the process, I started with the side bead molding pieces. First I cut them extra-long, and then I notched one end as shown in the lower left drawing.

I made this notch on the side moldings a bit longer than needed, as well. That way, I could mark exactly where the notch meets the corner of the leg (lower middle drawing), and miter it precisely to fit in the leg corner (lower right drawing). At that point, you're ready to cut the moldings to final length.

Once they're done, set the side moldings in place, and then measure across them to get the dimensions needed for the end moldings. These are made in a similar fashion, except with notches and miters on both ends. Here again, it's a good idea to "sneak up" on the length and fit of the miters to get good results.

As for the leaf bead moldings, they're the easiest parts of all. They're simply cut to length to match the leaf aprons. With the molding parts cut, the last step is to drill countersunk holes and install them with screws. Skip the glue here, as these moldings will have to come off if you ever need to remove the table legs for any reason.

HARDWARE. The next steps involve adding the leaf locks and table extenders

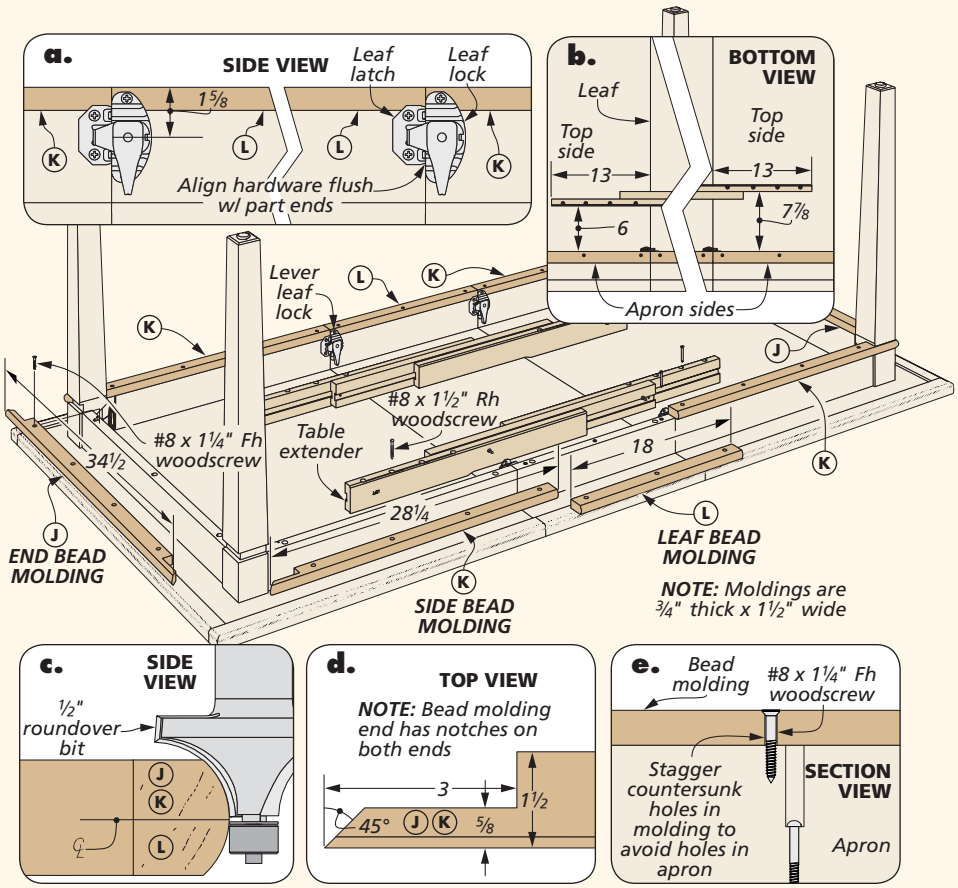

How-To: CUT & INSTALL BEAD MOLDING

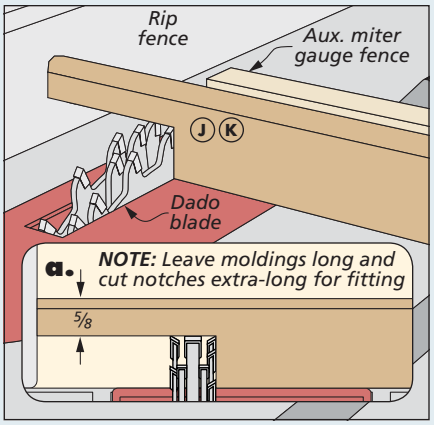

Notch Molding. Leave the side moldings extra-long, and cut an extra-long notch in one end with a dado blade.

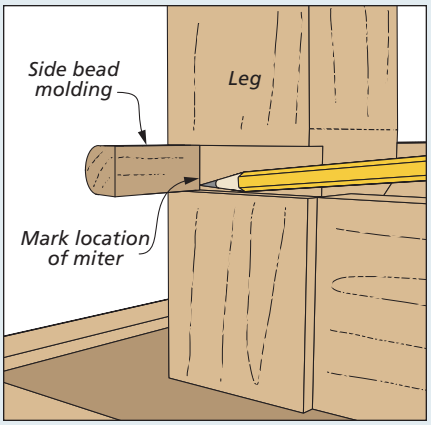

Mark for Miter. Put the molding in place on the table leg, and mark where the notch meets the corner of the leg.

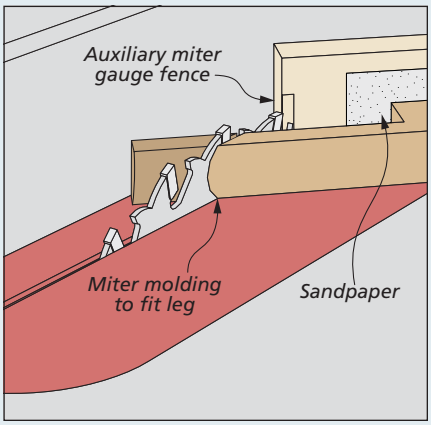

Cut to Fit. Now return to the table saw and cut a miter to that mark in order to fit the molding precisely to the leg.

to the underside of the table. These can be positioned and installed with screws as shown in details 'a' and 'b' on the opposite page. You'll note that I installed the locks on the aprons rather than the underside of the table. This provides a more secure connection and also makes them easier to access.

VENEER. At long last, it's time to have a helper assist you in turning the table right-side up. You're now on the home stretch, which includes adding the veneer and a final routing sequence.

I used almost an entire sheet (48" x 96") of paper-backed veneer for this table, and I ran the grain across the width of the table (drawings at right). To accomplish this, I cut full pieces for the two top sides, and cut two separate pieces to veneer the leaf. Cut the veneer oversize, as you'll trim it to final size once it's attached.

I applied the veneer using contact cement and a J-roller. To do this, you apply the cement to both the veneer and plywood, and let it tack up. Put dowels along the tabletop surface, and set the veneer in place. Then carefully remove the dowels, and press the veneer down firmly with the roller, working from the center of each panel toward the outside.

DECORATIVE ROUNDOVER. You'll note that the veneer is applied over the edging strips. This allowed me to add a unique design detail by rounding over the edging after applying the veneer. This creates a totally seamless appearance between the edging and veneer.

Before routing the roundover, though, use a flush-trim bit to trim the veneer flush with the surface of the table on all four edges. Then put the leaf in place, and lock the table securely together.

The roundover on the table ends and edges is no place for a dull router bit. I recommend investing in a new one for this cut. Rout the ends of the table first, cutting from left to right, before the edges. It's best to do this in two passes. For the second pass, set the bit depth to match what's shown in detail 'b' above.

After applying a stain and finish (the details are on page 51), your stylish new dining room table is ready for service. Now all you need are a few equally stylish chairs to put around it. And you'll find those starting on page 32. W

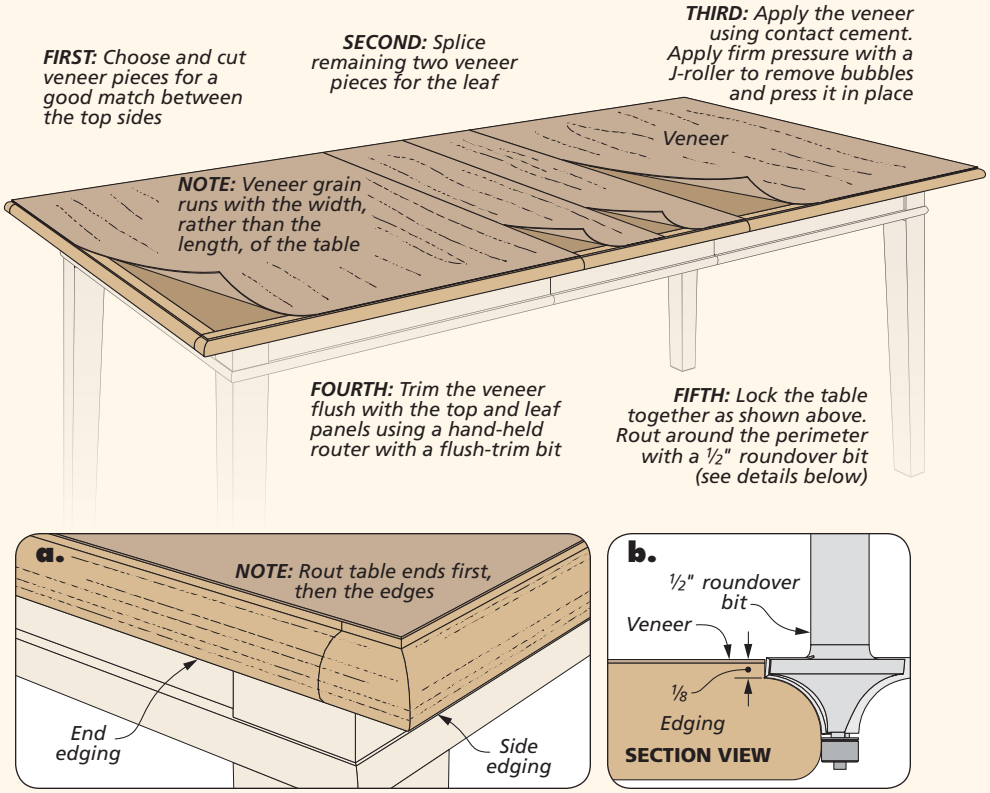

Materials, Supplies & Cutting Diagram

A Legs (4)		2¾ x 2¾ - 29¼
B Top (2)		¾ ply. - 30½ x 39
C Leaf (1)		¾ ply. - 18 x 39
D End Edging Strips (2)		1 x 1½ - 39
E Side Edging Strips (4)		1 x 1½ - 32
F Leaf Edging Strips (2)		1 x 1½ - 18
G End Aprons (2)		1 x 3¼ - 28½
H Side Aprons (4)		1 x 3¼ - 25¼
I Leaf Aprons (2)		1 x 3¼ - 18
J End Bead Moldings (2)		¾ x 1½ - 34½
K Side Bead Moldings (4)		¾ x 1½ - 28¼
L Leaf Bead Moldings (2)		¾ x 1½ - 18

- (4) 3" x 3" - 36" Cherry Turning Blanks
- (4) ⅜"-16 Threaded Inserts
- (4) Leg Glides
- (8 prs.) Alignment Pins/Sleeves
- (22) #8 x 2" Rh Woodscrews
- (4) Leg Braces
- (16) #8 x ¾" Rh Woodscrews
- (4) ⅜"-16 x 2" Hex Bolts
- (4) ⅜" Washers
- (30) #8 x 1¼" Fh Woodscrews
- (2 prs.) Lever Leaf Locks
- (1 pr.) Table Extenders
- (16) #8 x 1½" Rh Woodscrews
- (1) 48" x 96" Sheet Paper-Backed Veneer

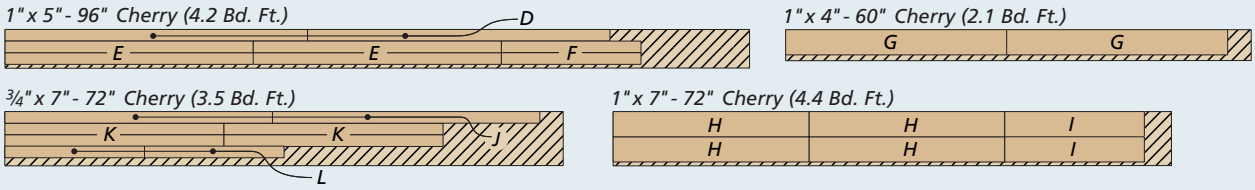

ALSO NEEDED: *One 48"x 96" Sheet of ¾" Birch Plywood*

tips from our shop

Shop Notebook

Table Saw Taper Jigs

The dining room table (page 22) and chairs (page 32) share some common design elements. One of the more noticeable of these is the tapered legs. I cut the tapers at the table saw because it provides a consistent result that requires little cleanup work afterward.

The key to cutting the tapers is a jig that holds the leg blank at the correct angle to the saw blade. The drawings below show the details of the simple jigs I used to support the workpieces. All you need are a couple of 6"-wide pieces of plywood to get started.

To make the jigs, first lay out the tapers on the legs themselves. Then align the taper line on the leg with the edge of the jig, and mark the outside edge and end of the leg onto the jig (Figure 1). This establishes the size and angle of the notch on the jig.

After that, it's just a matter of cutting the notch at the band saw (Figure 2). Stay inside the line, so you can sand up to it. Then secure the leg to the jig with double-sided tape before making each taper cut at the table saw (main photo).

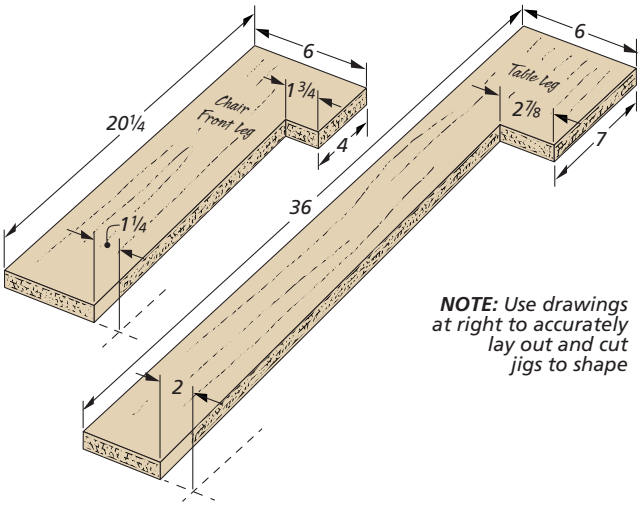

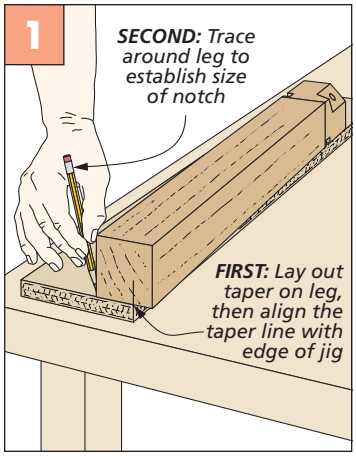

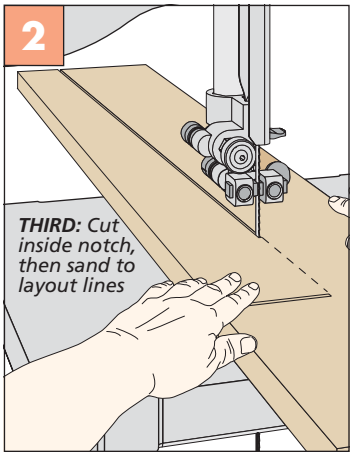

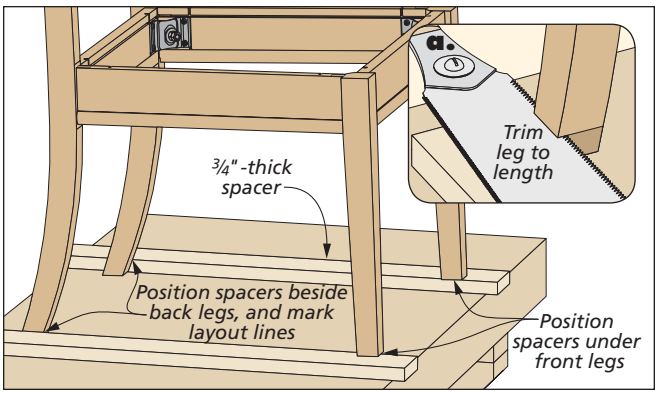

Chair Trimming Tip

When you complete the dining room chair frames as explained in the article on page 32, the seat is parallel with the floor. But I found that trimming the back legs by ¾" put the chairs at the perfect angle and made them even more comfortable.

The challenge, of course, is trimming the back legs so they are even with one another. The solution is the simple tip shown at left. Just position long spacer strips *under* the front legs and *beside* the back legs, and then mark a line on the back legs. This lays out the cut on the back legs at the perfect height and angle. In fact, you can even use the spacer strip as a guide for your hand saw to begin the cut (detail 'a').

Bending Form

The dining chairs (page 32) feature curved back slats for added comfort. To create the curved slats, you'll need to steam them using the technique explained on page 42. After steaming, it's just a matter of clamping them in the bending form shown at right.

The assembly consists of two cauls, one concave and one convex. At first glance, there's nothing difficult about making the form. But one thing to keep in mind is that the cauls have curves with slightly different radii to account for the thickness of the slats. So you can't just cut a board in two for the parts. Instead, use the sequence shown in Figure 1 to lay out the curves on the cauls using a strip of ¼" hardboard.

After the curves are laid out, cut and sand the parts as shown in Figure 2. Then hinge them together, leaving space to account for the thickness of the slat (detail 'a'). Page 42 provides the rest of the information on using the bending form.

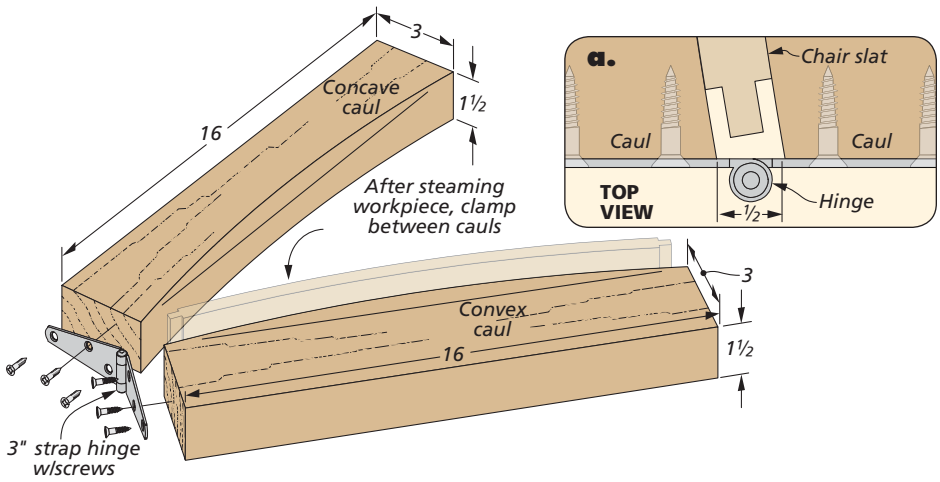

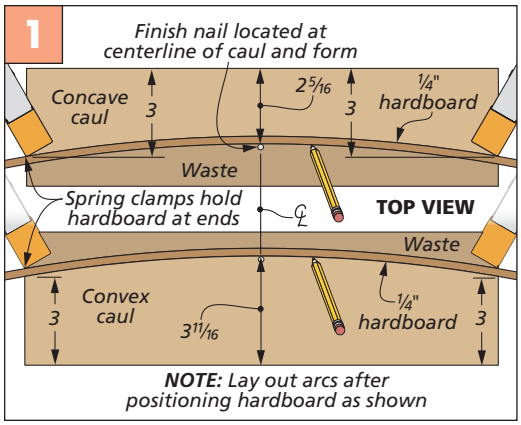

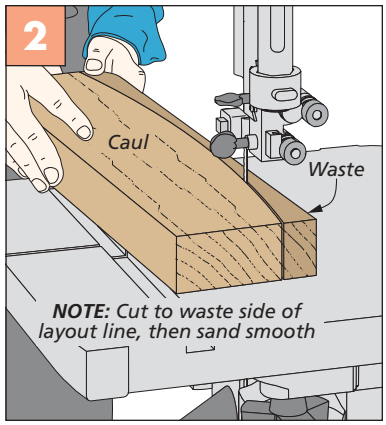

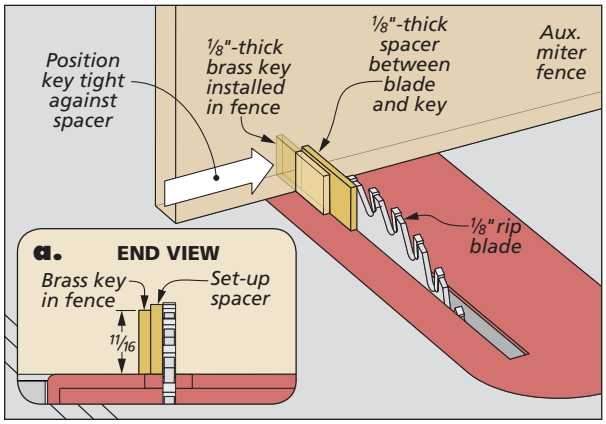

Finger Joint Indexing Jig

The keepsake box on page 14 uses finger joints at the corners to hold it together. I cut the slots for these joints at the table saw using an auxiliary miter gauge fence with a key installed in the fence. The fence supports the workpiece and the key allows the workpiece to be indexed for each successive slot.

BUILDING THE JIG. Since the finger joint slots are only ⅛"-wide, I decided to use a piece of ⅛"-thick brass stock for the key. Simply secure it with epoxy into a slot cut in the auxiliary fence. (You may have to lightly sand the key for a snug fit in the slot.) Another piece of brass stock works well for the spacer between the key and blade, as shown at left. Once the key is in the proper position, attach the auxiliary fence to the miter gauge.

Tray Template

To form the opening of the tray on page 18, I used the template shown at right. This template serves two purposes. First, it's used to lay out the center opening of the tray on the workpiece blank. And second, the template can be used to clean up the tray opening with a flush-trim router bit.

TEMPLATE CONSTRUCTION. Use the dimensions shown at right to cut the eight pieces to size. The template pieces are simple butt joints with a little glue to hold them together. The hardwood cleats are glued and nailed to the MDF base. The cleats act to "cradle" the workpiece. W

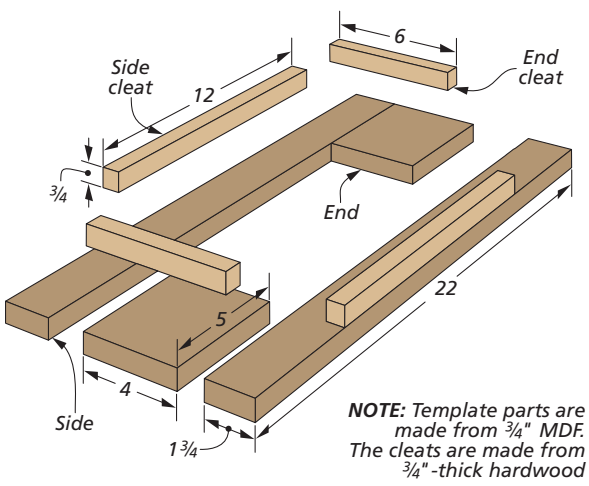

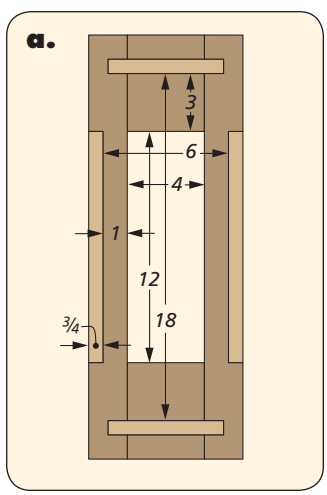

Heirloom Project

Stylish Dining Chair

There's nothing like a set of comfortable chairs to complement your dining room table. And don't be intimidated by the woodworking. By taking it one step at a time, great results are easy to achieve.

A set of matching dining chairs offers a surefire way to enhance the look of the dining table on page 22. Of course, a good set of dining room chairs not only has to match the style of the table that they'll go around, but they also have to be comfortable to sit in. And that's where getting all the right angles and curves, as well as dealing with some difficult construction techniques, comes into play.

However, there's no need to be concerned about trying your hand at building these. In the design for the chairs, you'll find that I've taken most of the tricky tasks out of the job. A couple different types of mortise and tenon joints, combined with easy-to-use steel braces, ensure the chairs will be solid enough to stand up to all the use they're sure to encounter in a lifetime of service.

HOW IS THAT POSSIBLE? The key to the design is the back legs. They're simply cut to shape on the band saw. The slats in the back of the chair are bent to shape using the technique of steam bending. If you've never tried your hand at this before, this is the perfect project for giving it a shot. The gentle bend of the slats is not at all difficult to create, so the parts make a great introduction to the process. And an off-the-shelf steam bending kit makes it easy to get started.

PRODUCTION RUN. You'll probably want to build several chairs for your table (I made six), so it makes sense to cut all the parts for the chairs at the same time. Making multiple parts while your tools are set up for a particular cut is a great way to save time and guarantee uniformity. Just be sure to mark your pieces carefully. On top of that, remember that there are distinct left and right pieces. I've also found it helpful to keep the parts for each chair together as you cut them to avoid confusion.

Construction Overview / OVERALL DIMENSIONS: 21"W x 39¼"H x 23½"D

A plywood template helps to lay out the mortise locations and the curved shape of the back legs

Crest rail and top of back legs share a bullnose profile

Slats in chair back are steam-bent to match the curve of the back legs

Woodsmith GO ON-LINE EXTRAS

For a full-size leg pattern, go to Woodmith.com

Spacer strips eliminate need to drill mortises in rails

The cushion and upholstery are fastened to a strong plywood base

Steel braces add extra strength to the joints to prevent damage from racking

Braces fit into kerfs cut on the table saw

Bullnose profile on seat rail beading adds an attractive decorative detail

Nylon glides make it easy to move the chairs without damaging the flooring

Gentle taper on the front legs is created with a simple jig at the table saw

Tabletop fasteners secure seat to rails

Loose tenons in the side seat rails join the front and back legs

▼ Select your own fabric for covering the seat cushions. The simple upholstery technique that I used is covered in detail on page 41.

◄ The slightly curved back and slats not only look great but add comfort to the chairs, as well.

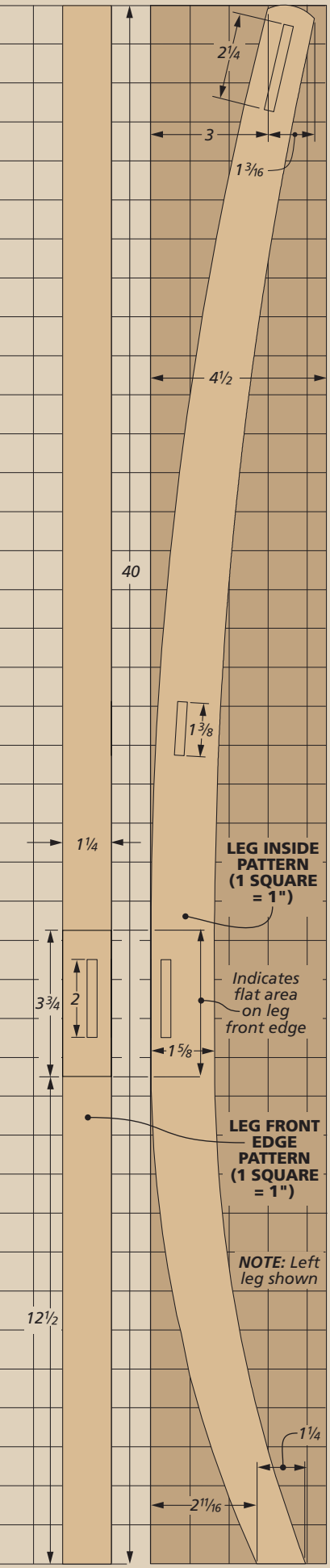

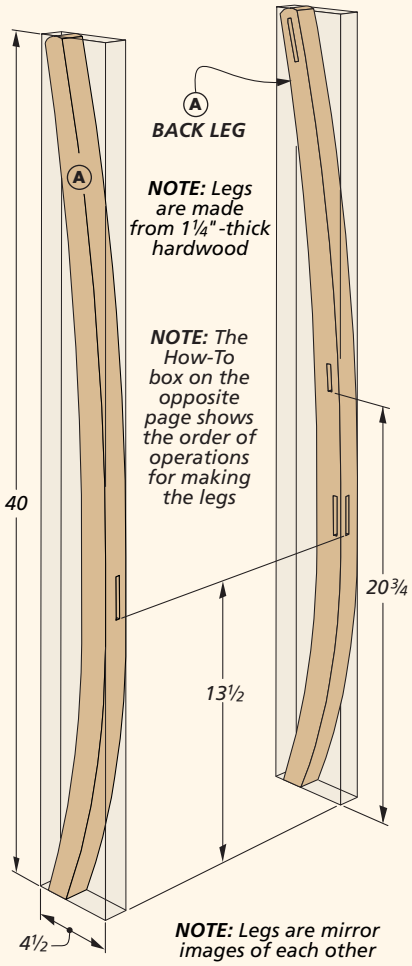

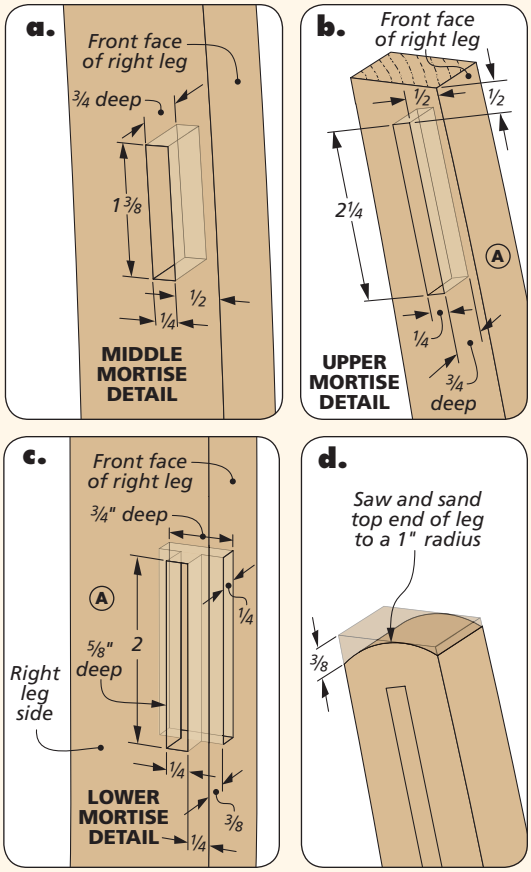

Cut & Shape the **BACK LEGS**

Since you're probably going to make more than one chair, I recommend making templates for some of the parts. By using templates, you help make sure that each of the parts is identical, and the joints will come together as they should. The first templates I made were for the back legs.

TEMPLATE. Using the pattern in the left margin as a guide, lay out the shape of the back leg on a piece of ¼" plywood. (There's also a full-size pattern at *Woodsmith.com*.)

Next, mark the mortise locations, being extra careful to locate them accurately. The box at the bottom of the facing page shows

How-To: MAKE THE LEG TEMPLATE

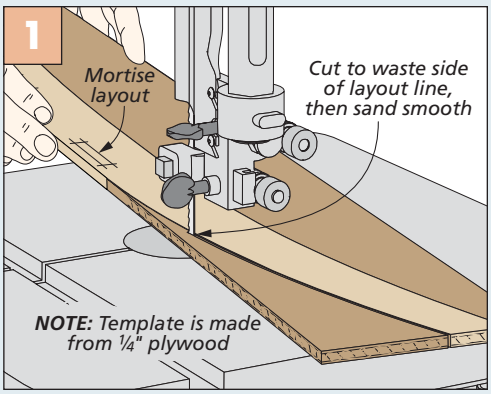

Cutting the Template. After laying out the shape of the template, including the mortise locations, cut it to shape at the band saw.

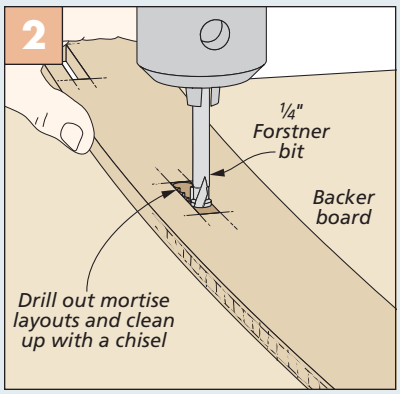

Mortises. By drilling out the mortises on the template, you can mark the mortise locations on the workpiece.

you how to cut out the template. After sanding the template smooth, you can drill the openings for the mortises and square them up with a chisel.

I made a second, straight template for the mortise location on the front face of the back legs. This might seem like overkill since there's only one mortise, but it's best to aim for consistency when it comes to making multiple pieces.

LEGS. The back legs are the foundation of the chair. They define the angle of the back and the flair at the bottom that adds stability. I cut them from extra-wide, 6/4 blanks. (The front legs are thicker.) Before you go any further, plane the blanks to a thickness of 1¼". After ripping them to width, use the template to trace the shape of the leg and outline the mortise locations. The drawings at right walk you through the rest of the process.

Because the legs are mirror images, it's a good idea to label them. For example, the leg shown in the drawings at right is the left leg (when viewed from the front). When you move on to the right leg, you'll need to flip the template over and use the opposite side.

MORTISES. The first step is to drill the lower mortise (Figure 1). Since this mortise is located on the flat portion of the leg, you can drill it using the fence to set the position relative to the edge.

The next mortise requires you to flip the blank on its edge against the fence, as shown in Figure 2. This mortise is for the seat sides. After drilling it to final depth, use a chisel to square up the sides and ends of both mortises.

SHAPE THE BACK LEG. At this point, you need to cut the leg to its final shape. You want the remaining mortises to be parallel to the front edge, so now is the time to establish that edge. Figure 3 gives you an idea how to go about this at the band saw. Then smooth the legs as shown in Figure 4.

MORE MORTISES. With the leg shaped, you can drill out the final two mortises (Figure 5). Just align the bit with the layout lines before drilling, and square the ends with a chisel when you're done.

BULLNOSE. The top end of each leg features a gentle bullnose profile. You can lay it out as shown in detail 'd' on the previous page. Cut the shape at the band saw (Figure 6), then sand it smooth.

How-To: CUT MORTISES & SHAPE LEG

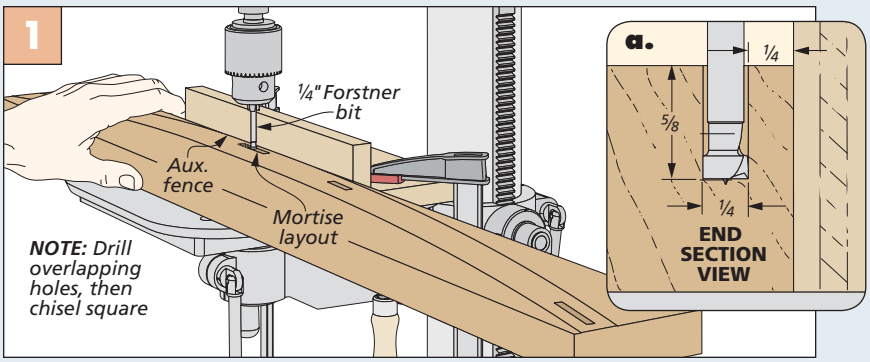

First Mortise. First, mark the mortise locations using the template. Then install a ¼"-diameter Forstner bit in the drill press and drill out the first mortise, using the drill press fence to set the distance from the edge.

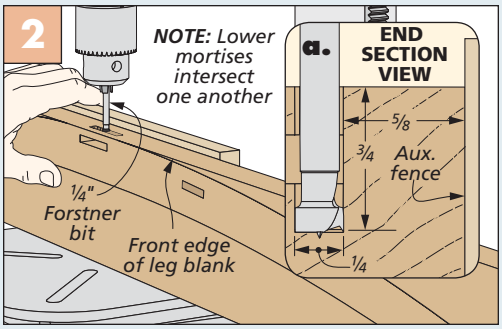

Second Mortise. Now you'll need to stand the leg blank on its side and drill the second mortise in the edge of the blank.

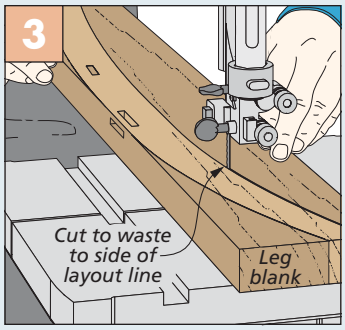

Shape Leg. Now cut the leg to shape at the band saw, staying outside the line.

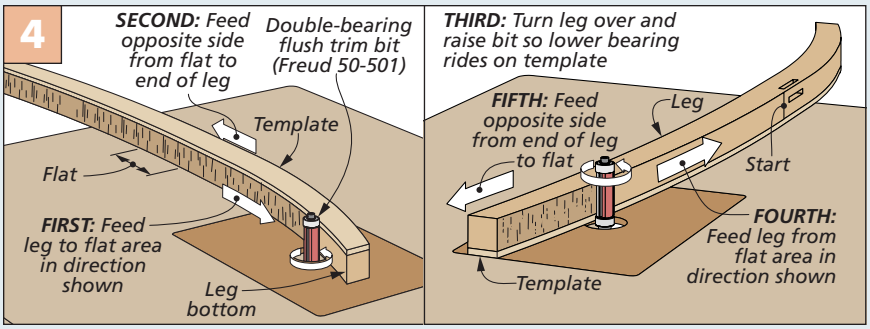

Trimming Curves Flush. The key to successfully trimming the legs flush is to rout "downhill" on the grain. To do this, you'll need to flip the leg over and rout in the correct direction, using the top or bottom bearing as necessary.

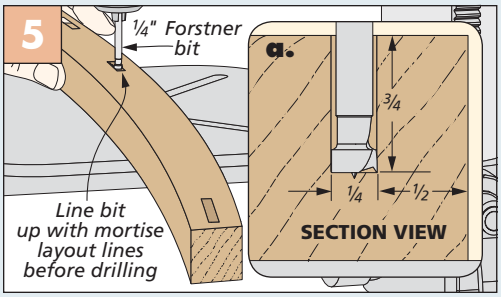

Final Mortises. Now that the leg is cut to shape, you can use the fence again to position and drill the remaining mortises.

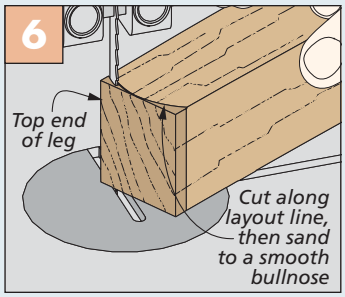

Bullnose the Top. The last step is to cut the bullnose profile on the top of the legs.

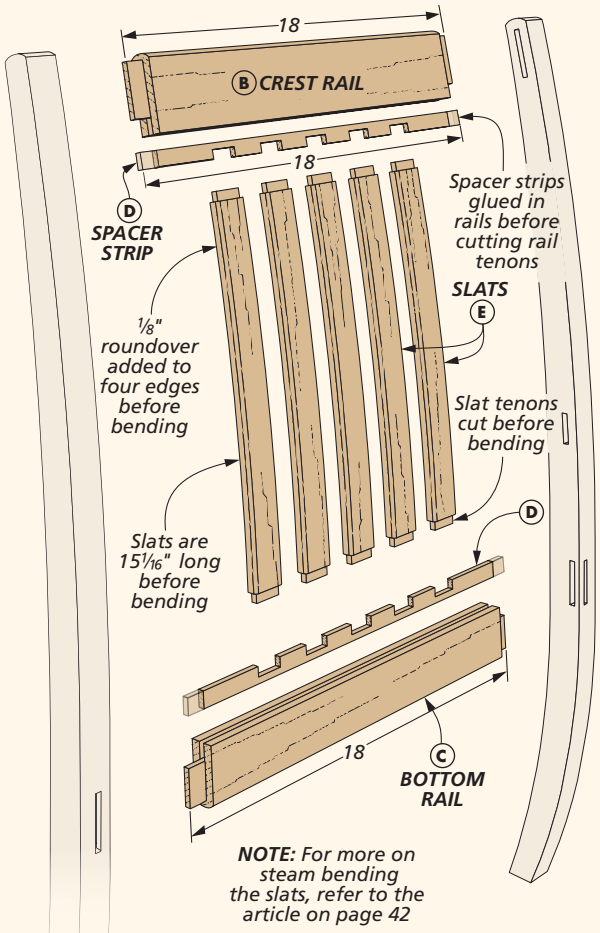

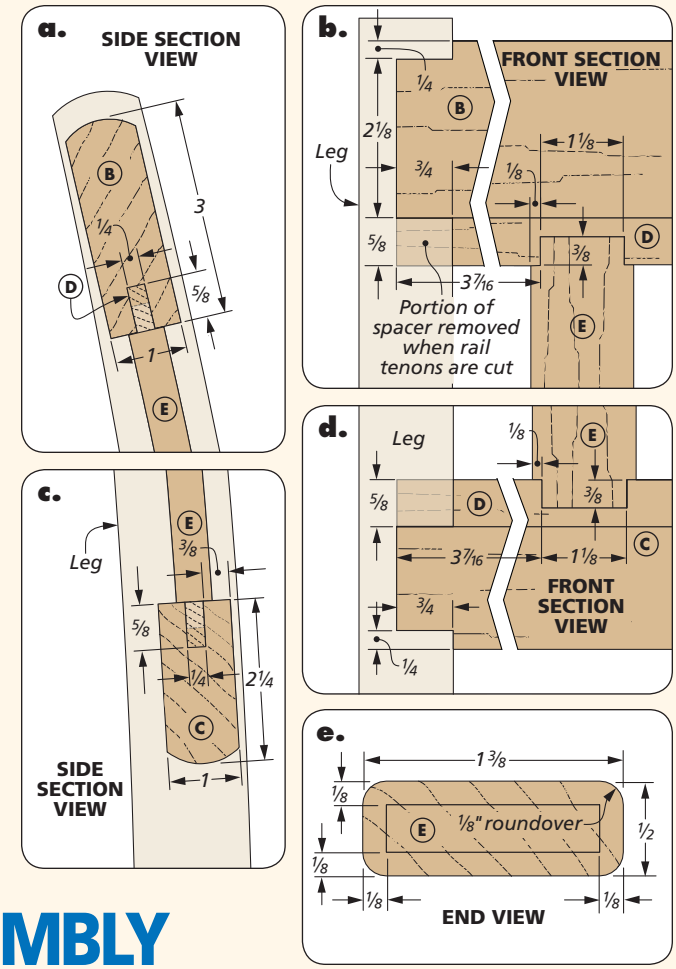

Making the **BACK ASSEMBLY**

With the back legs complete, the next step is to make a pair of rails that connect them. These two rails also house five vertical slats. The slats are gently curved to match the leg profile and provide a bit more comfort than a straight slat. I used a simple, steam-bending technique to shape the slats. The article on page 42 walks you through the process.

You'll notice there are no mortises in the rails to hold the slats. Instead, I cut a groove in each rail and glued in a notched spacer strip. The notches guarantee perfect positioning of the five slats.

How-To: CUT RAIL GROOVES & BULLNOSE

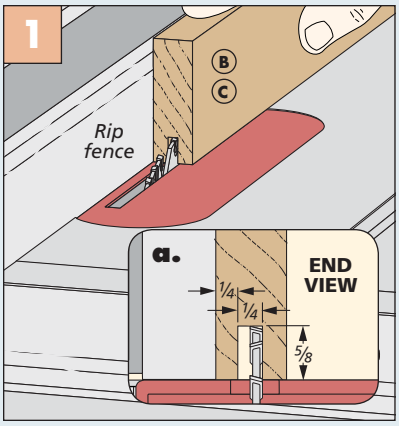

Groove. For the centered groove, make the first cut with the blank just off center, then flip and repeat.

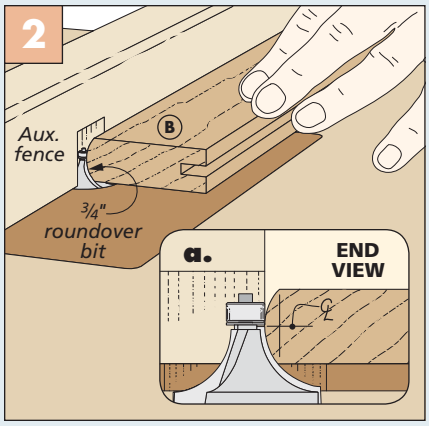

Bullnose. Using a roundover bit, set the height so the bearing rides on the center and rout the profile in two passes.

RAILS. The crest rail (top rail) is a bit wider than the bottom rail, but other than that, you'll treat them the same. Once they are cut to overall size, start by cutting a centered groove on the lower edge of the crest rail and the upper edge of the bottom rail.

You don't need a dado blade for this. Figure 1 at left shows how you can start the cut slightly off center, make one pass, then flip the rail and make a second pass. The result is sure to be centered. Nudge the fence over and repeat, sneaking up on a ¼"-wide groove. After that, I added a bullnose profile on both rails on the edges opposite the grooves (Figure 2).

SPACER STRIPS. Thin hardwood spacers, notched to accommodate the slats, fill the grooves in the rails. To make them, start by planing some stock to ¼" thick. This is a bit on the thin side for many thickness planers, so it might be best to use a carrier board for the stock. Figure 1 on the next page shows how to do it. All you need to do is attach your stock to a piece of plywood and take a series of light passes until you reach the thickness you need for the spacers.

NOTCHES. The next step in making the spacers is to lay out the location for the notches on the blank. Then install a dado blade in the table saw and an auxiliary fence on the miter gauge. Now cut the notches, as shown in Figure 2.

Working from a centerline on the spacer blank, line up a cut, clamp a spacer block to the fence, and make the cut. After the first cut, flip the blank end-for-end and repeat. Then flip the blank over and do it again. This way, you only have to line up a cut once and make it four times to keep everything evenly spaced. Due to the width of the notches, you'll have to make two separate passes to fully cut out each notch.

After cutting all the notches, install a rip blade in the table saw and rip the two spacer strips from the blank. As you install the strips, be careful with your glue placement. You want to avoid getting excess glue in the notches. Also be sure to clean up any squeezeout carefully after the fact.

TENONS. With the spacer strips glued into the rails, you're ready to cut the tenons on the rails. Figure 4 shows how I cut the cheeks using a dado blade in the table saw. You can complete the tenons by cutting the shoulders using the technique shown in Figure 5. The tenons are offset, so you'll need to adjust the blade height between shoulder cuts (Figure 5a). Then you can turn your attention to the slats.

SLATS. The ½"-thick slats are bent to match the curve of the legs. But first you'll need to do a bit of prep work on them. After cutting the slat blanks to final size, cut the tenons using the same setup you used for the rails. Then rout a roundover on all four edges at the router table. Finally, give the slats a good sanding before steaming them for bending. This way, all you'll need to do later is touch them up with a bit of hand sanding.

The steaming operation is described on page 42, and the details for making the bending form are on page 31. When you're done, the result should look like the clamped-up form in Figure 7.

Gluing the slats and rails, then dryfitting them in the leg mortises, will help ensure the assembly is aligned (Figure 8). I made some clamp blocks to protect the bullnose profile on the rail edges.

How-To: MAKE SPACERS & SLATS

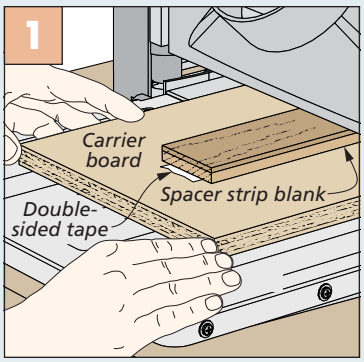

Spacer Blank. With the blank taped to a carrier board, plane the blank to a thickness of ¼".

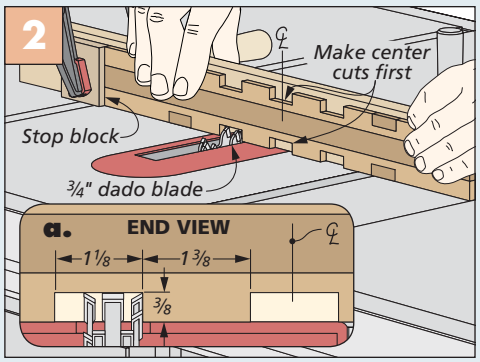

Cut Notches. Using the extra-wide blank, work out from the center, cutting and flipping until you complete the notches.

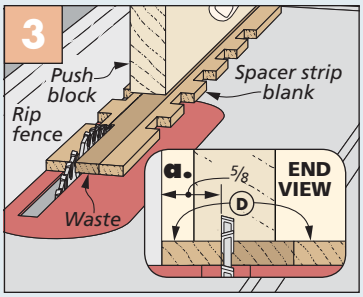

Rip Strips. Now you can use a push block to rip the two spacer strips from the wide blank.

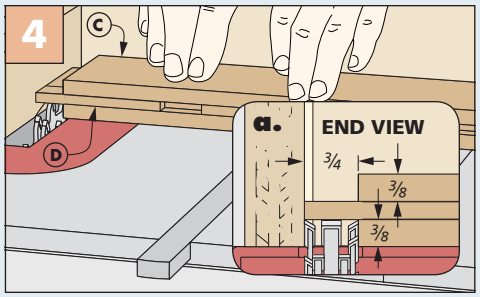

Cheeks. You can use the same miter gauge setup to cut the tenon cheeks using a dado blade in the saw.

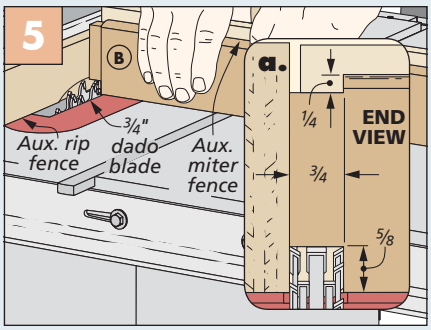

Shoulders. With the spacer strips installed in the rails, use the miter gauge to cut the tenon shoulders on the rails.

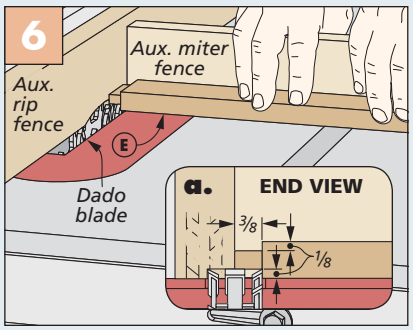

Tenons on Slats. I cut several slat blanks, including some extras, and then cut the tenons on all of them.

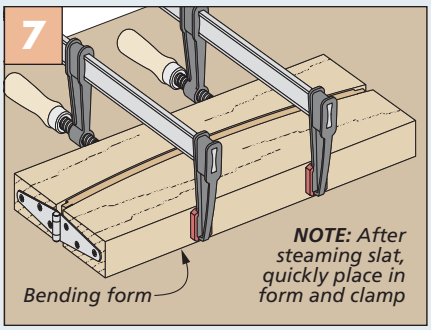

Bending Slats. The blanks come right out of the steam and into the bending form to shape the curve.

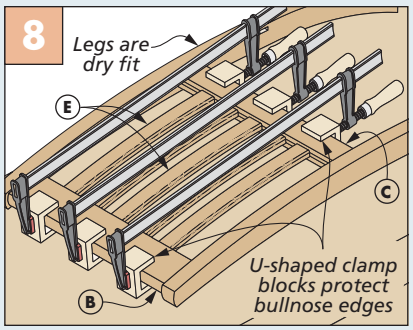

Assembly. I used a dab of glue on each slat and installed them in the rails. The legs are dry fit, not glued on yet.

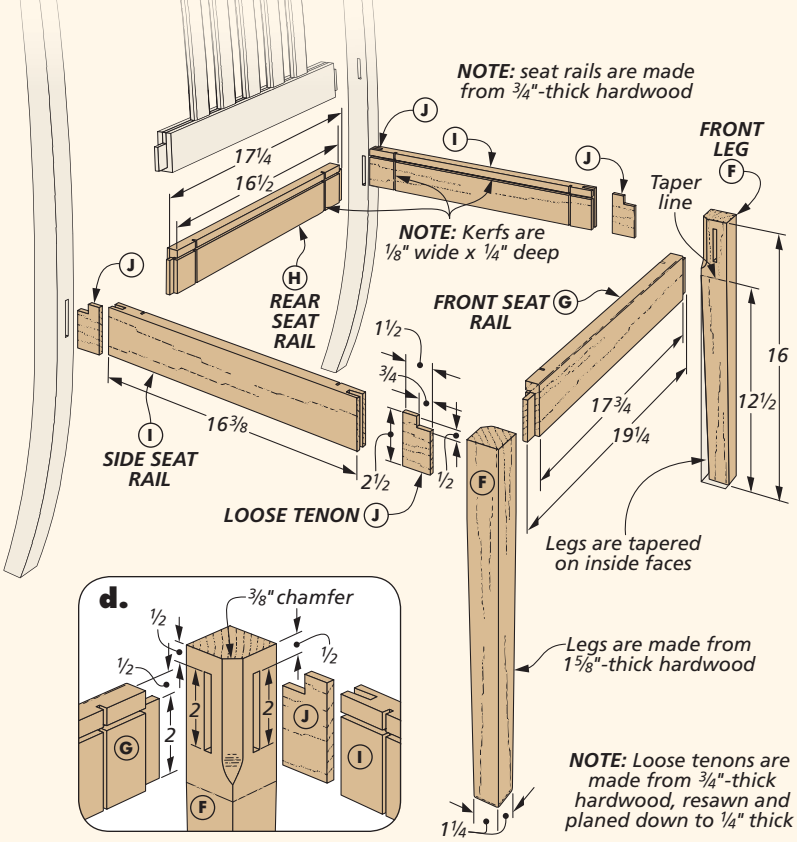

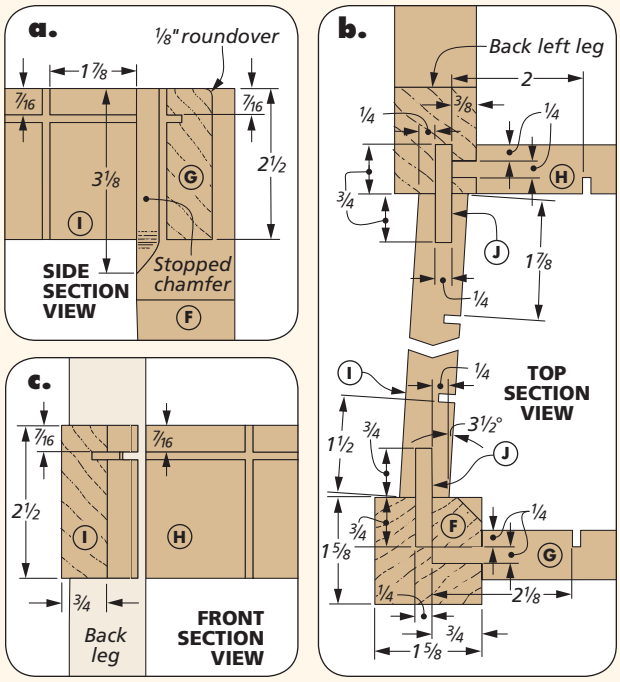

Completing the CHAIR FRAME

You can now turn your attention to the front legs and seat rails. The legs are pretty straightforward to make, as are the front and back seat rails. They're all assembled with conventional mortise and tenon joints just like the back legs and back rails.

The side seat rails are a little bit different. They angle outward from back to front. To simplify the joinery, I opted for loose tenons for these rails. This way, you only need to cut an angled slot rather than an angled tenon. You'll find it's a lot simpler operation to complete.

FRONT LEGS. The front legs are much easier to make than the back legs. They start out as square blanks that are cut to final size. The drawings below show what you'll need to do to complete the legs. The first step is to cut mortises on the two inside faces (Figure 1). Now you can head to the router table to rout the stopped chamfer on the inside corner. This chamfer is necessary to accommodate the leg brace hardware you'll add later. As you can see in Figure 2, all you need to do is draw a line on the fence to make all the chamfers a consistent length.

To complete the front legs, I tapered the inside faces of the legs using a simple jig at the table saw. Details and dimensions for the jig can be found in Shop Notebook on page 30. The jig holds the blank at the correct angle as you cut the taper on the leg (Figure 3 below).

How-To: CUT FRONT LEG MORTISES, STOPPED CHAMFER & TAPERS

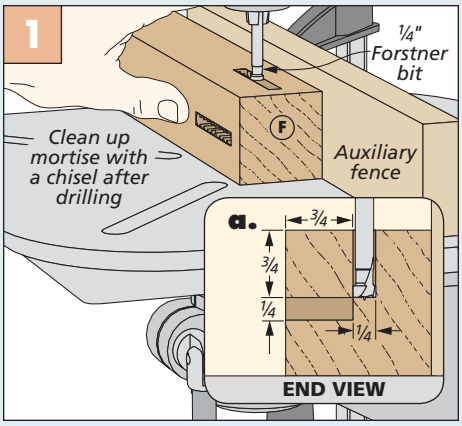

Front Leg Mortises. After cutting the leg blanks to final size, drill out the two mortises in each blank.

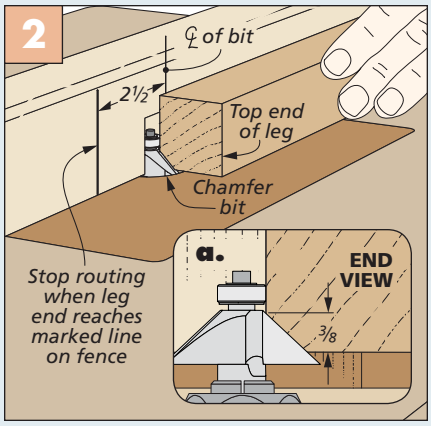

Stopped Chamfers. I routed a stopped chamfer on the inside corner of the legs by using stop mark on the fence.

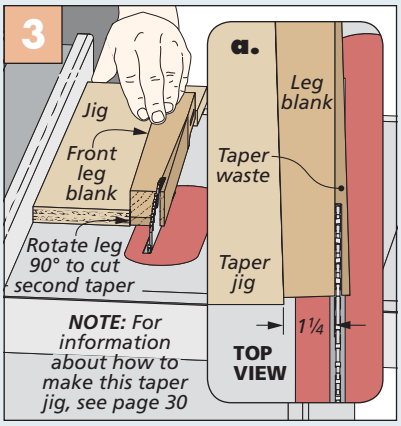

Tapering the Legs. A simple jig makes quick work of cutting the tapers on the front legs.

FRONT & BACK SEAT RAILS. As I said earlier, the two side rails are skewed out slightly. This is standard construction for chairs, as it makes the seats wider at the front. On top of that, I used leg braces to add strength to the chairs. You'll need to cut kerfs on the rails to accept this hardware.

You can start by cutting all four of the seat rails to final size. After that, cut the tenons on the front and back rails. Figure 1 at right shows how I used an auxiliary fence on the miter gauge with a dado blade in the table saw to cut the cheeks of the tenons first. Then cut the shoulders, testing the tenons in the leg mortises and sneaking up on a snug fit (Figure 2).

Swap out the dado stack for a combination blade and make use of the auxiliary miter gauge fence again as you cut the kerfs for the leg braces (Figure 3). Details 'a,' 'b,' and 'c' on the opposite page contain the dimensions for placement of the kerfs.

I also used tabletop fasteners to attach the seat to the rails. The fasteners fit into another saw kerf, this time a shallow groove parallel to the top edge of the rails. Figure 4 shows how to make this cut.

SIDE SEAT RAILS. The side seat rails present a different challenge. In Figure 5, you can see how I used a ¼"-wide dado blade that was tilted 3½° to cut the slot for a loose tenon. I also used a carrier board to push the piece vertically through the blade.

The next cut is made by placing the opposite face against the carrier and the opposite end down on the saw table (Figure 6). The result is two slots that are angled in the same direction.

You'll complete the side seat rails with the final cuts on the ends, using a combination blade tilted 3½° (Figure 7). These angled cuts make it possible to install the side rails without cutting angled mortises and tenons.

LOOSE TENONS. Now you can turn your attention to cutting the loose tenons you'll need to attach the side rails. Start by planing some stock to ¼" thick and cutting the blanks to final width and length. Instead of cutting each one individually, I used double-sided tape to join them together and gang cut them at the band saw, as shown in Figure 8.

How-To: MAKE SEAT RAILS & LOOSE TENONS

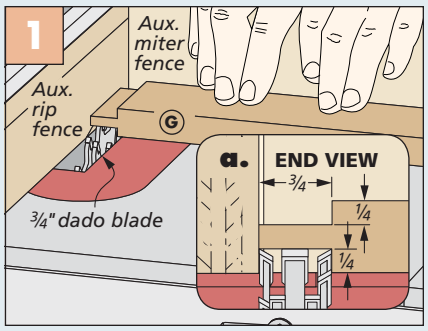

Tenon Cheeks. With a dado blade in the saw and an auxiliary fence on the miter gauge, cut the tenon cheeks.

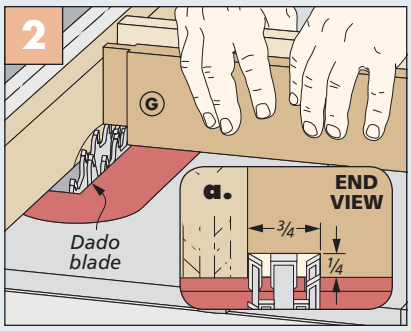

Tenon Shoulders. Use the same table saw setup to cut the shoulders. Sneak up on a snug fit by raising the blade.

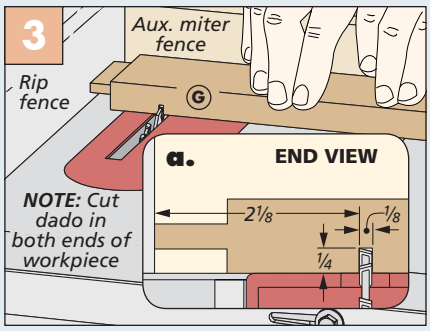

Kerfs. Each seat rail needs a kerf near the end for the leg braces. (See details on opposite page for locations.)

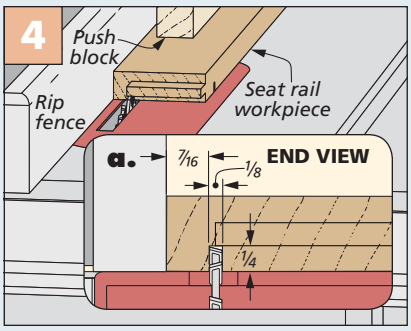

Groove for Mounting Clamps. The tabletop fasteners fit into a groove in the upper edge of the rails.

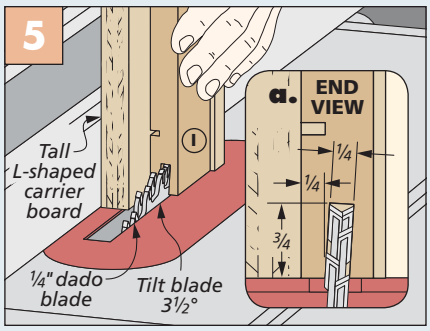

Side Rails. To cut the angled slots for the loose tenon joinery, I used a carrier board with a cleat to hold the blank.

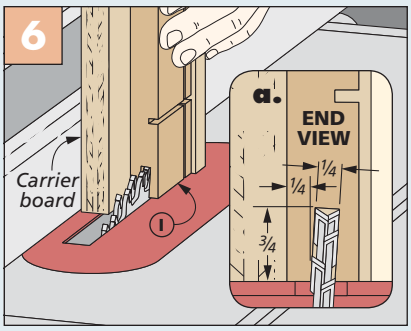

Cut Second Slot. Flip the blank and cut the slot on the opposite end of the side rails using the same setup.

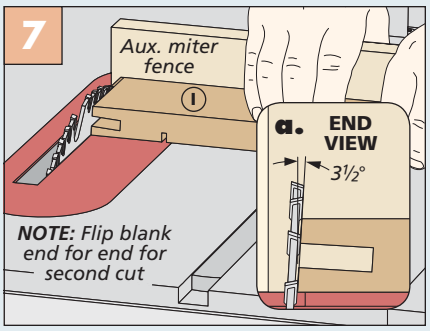

Bevel the Ends. Finally, bevel the ends of the side rails so they'll mount flush with the both the front and back legs.

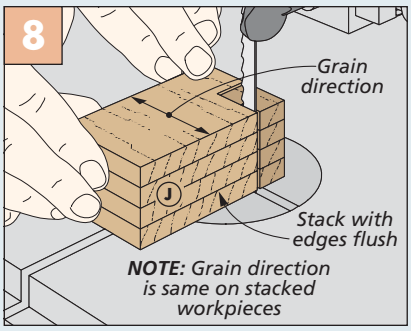

Loose Tenons. Secure the blanks to one another with double-sided tape before cutting the notches.

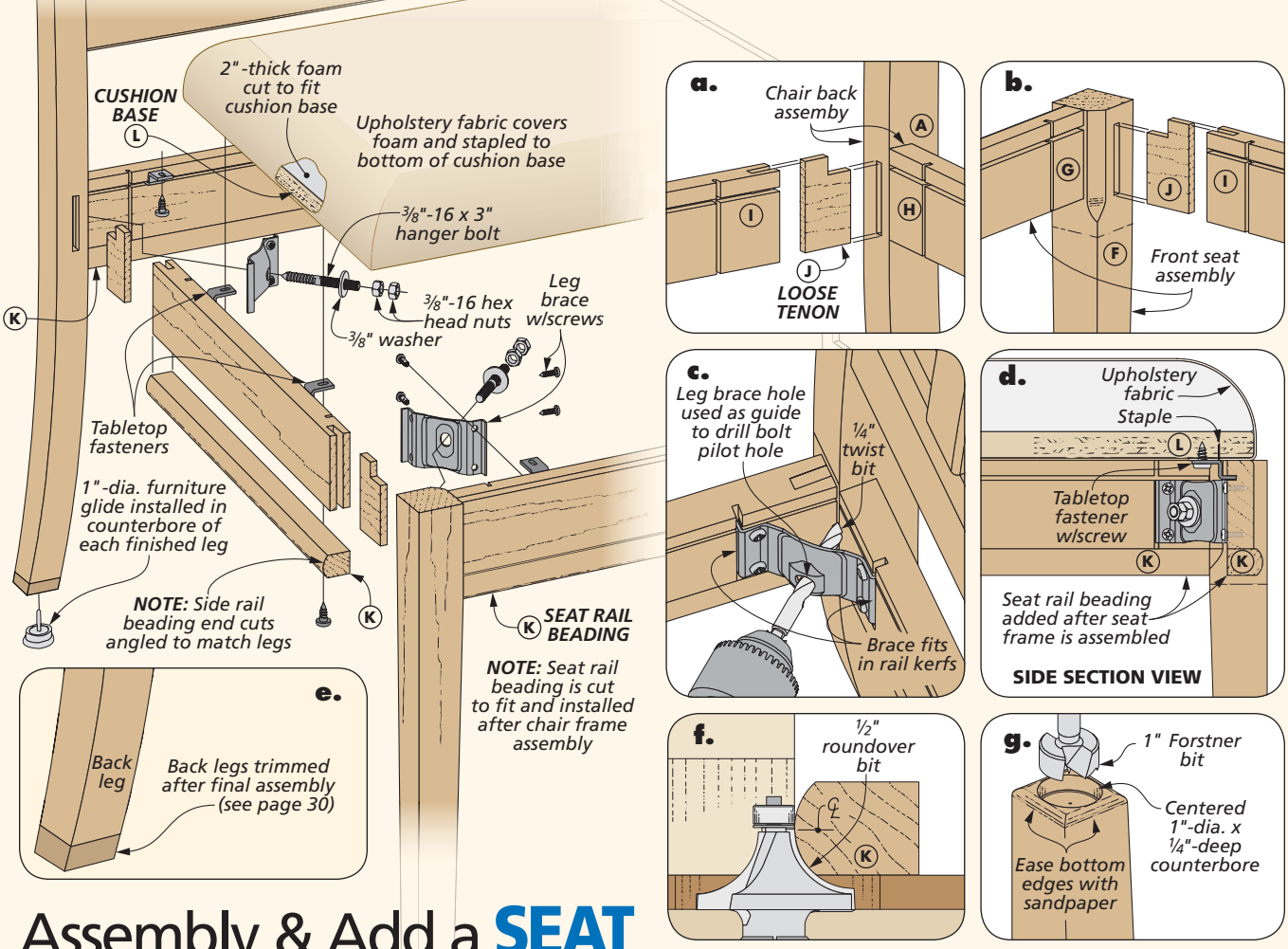

Assembly & Add a SEAT

It's finally time to assemble the chair frame. The drawings below help guide you through the proper sequence. Before getting out the glue, it's a good idea to dry fit the components. I even like to clamp up all the joints to make sure there are no gaps in the joinery.

BACK ASSEMBLY. Start by assembling the back legs, crest rail, bottom rail, and the rear seat rail with glue and clamps. Figure 1 shows a clamping strategy that applies pressure on every joint.

FRONT ASSEMBLY. Now attach the front seat rail to the front legs (Figure 2). Check the assembly to make sure the legs are square and not splayed. To do this, measure the outside distance between legs at the top and the bottom.

Finally, install the side seat rails using the loose tenons and glue, as shown in details 'a' and 'b.' Figure 3 shows

How-To: GLUE & ASSEMBLE THE FRAME

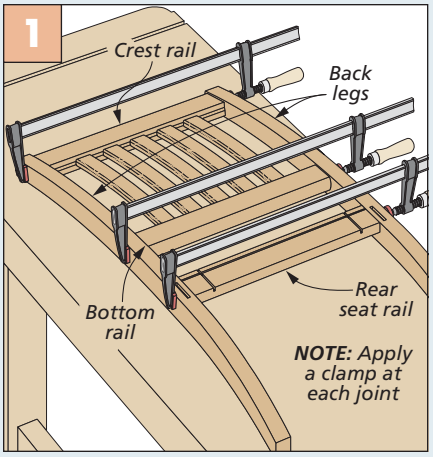

Chair Back. Glue and clamp the tenons on the back assembly and rear seat rail into the mortises on the legs.

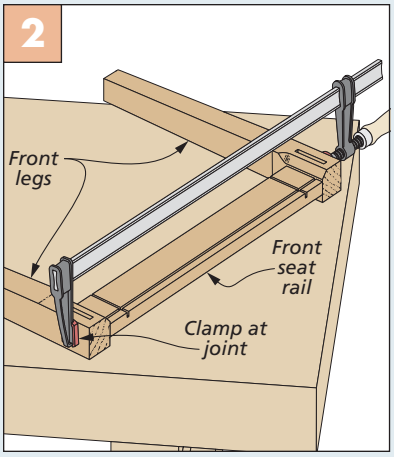

Front Legs. The front seat rail connects the two front legs. The key here is to keep the assembly square.

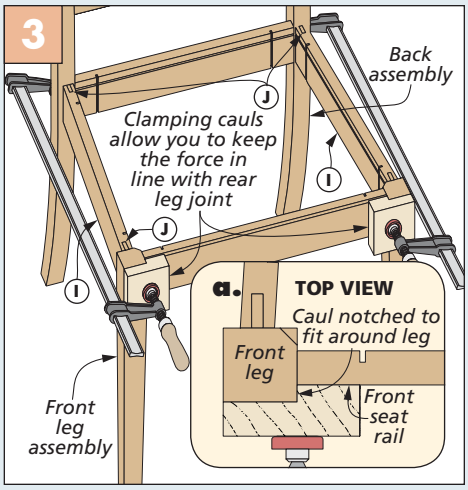

Final Glueup. Adding the two side seat rails using loose tenon joinery completes the chair frame assembly.

this stage of the glueup. The clamps draw the joints together with the chair upright. Figure 3a shows the clamping cauls I made for this portion of the assembly. They're just pieces of scrap wood, notched to fit around the leg. By using them, you not only avoid damaging the leg with the clamps, but the lip of the caul also helps keep the leg aligned while you add clamping pressure.

BRACES. As I mentioned earlier, I used metal leg braces to reinforce the joints. The kerf cuts you made in the seat rails provide slots for the edges of the braces. The main drawing and detail 'd' on the opposite page show how it all goes together. You can start by adding the chair braces in the dadoes with screws. When they're installed, use the center hole as a guide to drill a starter hole for a hanger bolt (detail 'c,' opposite page). Now add the washers and nuts, and drive in the bolt with a socket wrench.

SEAT BEADING. Seat beading adds a decorative detail to the underside of the seat rails. Simply cut these to width and rout them as shown in detail 'f' on the opposite page. Then cut them to length to fit beneath the seat rails before gluing and clamping them in place.

TRIM BACK LEGS. There's one more detail to take care of on the chair frame, and that's trimming the back legs (detail 'e,' opposite page). This puts the chair at a comfortable angle for sitting, and it's easy to take care of with a hand saw. Shop Notebook on page 30 has all the information you'll need. With that done, you can drill holes in the legs in order to add the furniture glides (detail 'g,' opposite page). Then stain and finish the chairs (refer to Sources on page 51).

How-To: MAKE THE SEAT CUSHION

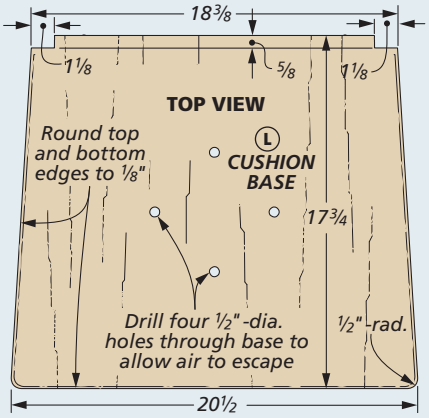

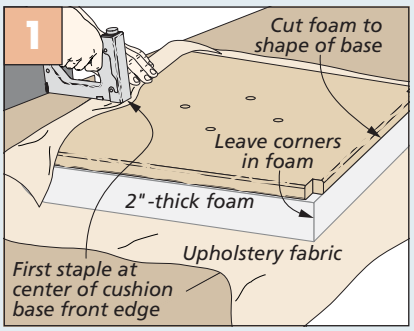

First Staple. With the fabric centered and the cushion upside down, staple one edge of the fabric in the center.

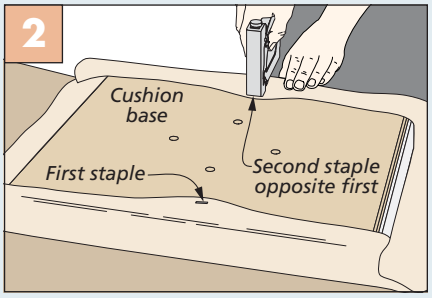

Next. Now move to the opposite side and pull the fabric just tight enough to remove any folds, then staple in place.

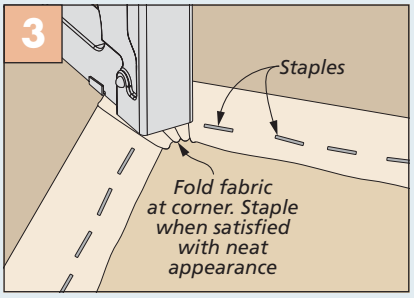

Fold the Corners. Fold the corners over and cut away any excess fabric before adding the staples.

SEATS. The cushioned seats are the final components of the chairs to add. Start by cutting the plywood base to size, using the chair as a guide (drawing above). After completing the upholstery, you'll attach the base with screws through the tabletop fasteners that fit into the grooves in the rails.

MAKE THE CUSHIONS. The cushions each start with a layer of foam cut to fit the plywood base. Then you'll need to cut an oversized piece of fabric to cover the foam. After stapling one edge of the fabric, stretch it and staple the opposite edge in place (Figures 1 and 2). Be careful not to stretch too tightly, or you'll leave depressions. Then rotate back and forth between the edges, stretching and stapling the fabric. When you get to the corners, fold the fabric under and staple it in place. You'll need to remove some material where it bunches in the corners. Once you're happy with the result, attach the seat to the chair frame.

With your table and chairs complete, now all you need is a large meal in order to celebrate this stylish new set of dining room furniture. W

Materials, Supplies & Cutting Diagram (for one chair)

A	Back Legs (2)	1 1/4 x 4 1/2 - 40	K	Seat Rail Beading (1)	3/4 x 1 - 75 rgh.
B	Crest Rail (1)	1 x 3 - 18	L	Cushion Base (1)	3/4 ply. - 20 1/2 x 17 3/4
C	Bottom Rail (1)	1 x 2 1/4 - 18	•	(4) Leg Braces w/Screws	
D	Spacer Strips (2)	1/4 x 5/8 - 18	•	(8) Tabletop Fasteners w/Screws	
E	Slats (5)	1/2 x 1 3/8 - 15 1/16	•	(4) Nylon Glides	
F	Front Legs (2)	1 5/8 x 1 5/8 - 16	•	(4) 3/8"-16 x 3" Hanger Bolts	
G	Front Seat Rail (1)	3/4 x 2 1/2 - 19 1/4	•	(8) 3/8"-16 Hex Head Nuts	
H	Rear Seat Rail (1)	3/4 x 2 1/2 - 17 1/4	•	(4) 3/8" Flat Washers	
I	Side Seat Rails (2)	3/4 x 2 1/2 - 16 3/8	•	2" x 24" x 24" Upholstery Foam	
J	Loose Tenons (4)	1/4 x 1 1/2 - 2 1/2	•	(1 yd.) Upholstery Fabric	

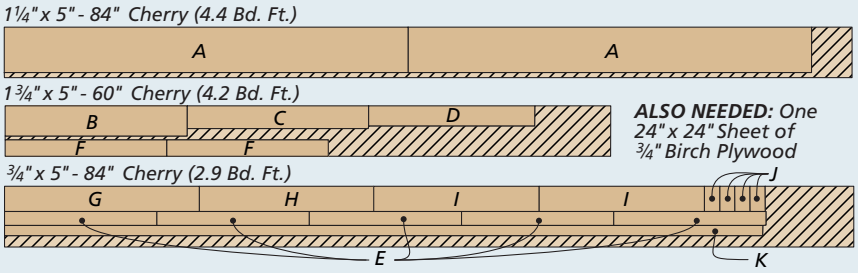

ALSO NEEDED: *One 24" x 24" Sheet of 3/4" Birch Plywood*

the basics of Steam Bending

Whenever I design a project that has curved parts, I try to decide which method I'll use for making them before I finish the plans. For instance, for the back slats in the dining room chairs on page 32, I decided that steam bending would be the best choice for the gently curved parts. I don't like cutting curved pieces from a thicker blank because sanding away the saw marks on dozens of identical curved pieces can be a nightmare. I also ruled out a bent lamination, fearing the joint lines would be noticeable and detract from the look of the chairs.

▲ A simple bending form is all you need for most projects. A hinge on one end of the form makes it easy to use and keeps the two pieces aligned.

ADVANTAGES. Steam bending offered the perfect solution. You can cut the joinery and sand the blanks while they're flat, then just touch them up again after bending. And you get a more consistent grain appearance than you would by cutting the piece out of a thicker blank.

WHAT IS IT? Stream bending is a time-tested technique that infuses wood with steam, softening the fibers to the point that they become elastic enough to bend without breaking. Boat builders have been steaming wood planks for centuries to curve them around a hull.

The good news is, it's never been easier to steam bend wood than it is today. There are safe and reliable ways of generating steam and plenty of easy techniques for building bending forms.

THE SETUP. The steam generator I use is from *Rockler*. (You can see it in the background of the top photo on the opposite page.) It provides nearly two hours of continuous steam, more than enough for most projects.

To contain the steam and the project parts, I use a piece of PVC pipe. It makes a great steam chamber because it seals well and it can stand up to the 200° temperatures and the humidity without breaking down or leaking. As the steam fills the chamber, the parts, suspended on wood

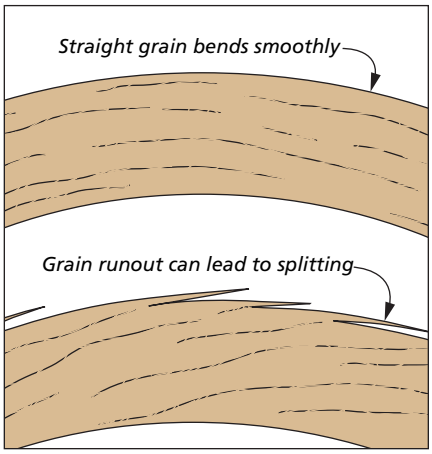

▲ The small steam generator in the background provides more than enough steam for most woodworking projects.

▲ Dowels that span holes in the chamber serve as a platform for the project parts during the steaming process.

dowels, absorb it. The excess steam is allowed to escape through small holes drilled on the bottom edge of the ends. I keep a pan under each hole to catch water drops. These holes are critical. Without them, the steam could pressurize the container and cause it to explode.

FORMS. The second component in the steaming process is the bending form. The photos on the opposite page show the forms in action and the resulting curved pieces. As you can see, they're not very complicated. For a gentle bend, like the one required for the chair slats, a two-piece form is ideal. One piece is cut to match the inside curve, and the other matches the outside. A hinge holds the two together and keeps them aligned while you clamp them up. To see more details on how I made the forms, check out Shop Notebook on page 31.

The great thing about a form like this is that the wood fibers are fully supported on the back of the curve. This is where the wood sometimes wants to split due to grain runout. Runout occurs when the wood isn't cut straight along the grain lines and the grain ends at an edge. The upper left drawing illustrates the concept and shows why it can be a problem when trying to bend a workpiece. By supporting the fibers, you prevent most of the potential splitting. You can go one step further by making sure to pay attention to the grain direction when you cut the blanks and trying to use the straightest grain you can find.

If you need to make larger pieces, your bending form might incorporate an inside curved form with simple pegs and wedges to hold the parts in place. The photo below shows this technique.

BENDING. It might seem like the preparation for bending is a chore, but those steps make the actual bending pretty simple. The last thing to do before firing up the steamer is to make sure you have a good pair of leather gloves for handling the heated parts.

Now you're ready to load up the steam chamber with your parts. You'll want to arrange them to leave gaps between the pieces, so the steam can circulate freely. Then seal the chamber and turn on the steamer.

I drilled a hole in top of the steam chamber so I could drop in a meat thermometer to make sure the temperature stays over 200°. You don't want to open the chamber early, or the steam will escape, allowing the parts to cool.

I've found that the old formula of one hour per inch of thickness is a pretty good guide for how long to leave the parts in the steam chamber. But it's always a good idea to make a few extra blanks to experiment with, not only for the timing, but to test for springback in the parts, as well. (For more on springback and how to compensate for it, see Shop Notebook on page 31.)

When the steam has done its job, quickly place the piece in a bending form and clamp it up. It's best to keep the piece in the form for at least a few hours. Then you can take it out and let it dry completely overnight. After that, give it a final sanding and it's ready to install in your project. W

▲ An alternative to the two-part form shown on the previous page is a single-side form. The inside form is cut to the desired shape. A bending strap supports the wood fibers during the bend, while dowels and wedges hold the workpiece tight against the form.

protect your investment with a Router Bit Rehab

Woodworkers expect a lot from their router bits. Whether it's shaping an edge or plowing a dado or groove, a bit spinning at 20,000 RPM creates enormous amounts of friction as it cuts through the wood. If you couple that speed with the inevitable resin in most woods, you often get burning or scorching of the bit.

▲ A typical used router bit (left) shows some dirt and scorch marks. But after cleaning, it looks good as new (right).

Without some preventative care, the result can be a worn-out bit that needs replacing. But if you get in the habit of performing some routine maintenance, you can prolong the life of your bits. With a little patience, you can usually restore even the worst looking bits to workable condition. The before and after photos in the left margin show that it's possible to make a worn or dirty bit look as good as new.

▲ A brass wire brush is stiff enough to remove tough dirt and burnt-on pitch, but it won't harm the carbide cutting edges in any way.

INSPECTION. The basic process begins with a thorough inspection of your bits. There's a good chance you'll have at least a few that are in need of some help. For this, I like to keep an air hose and a brass wire brush handy to remove any loose dirt.

Start by taking a close look at the cutting edges. Use the wire brush to loosen any dust and dirt, followed by a blast of compressed air. Sometimes this is all it takes, especially if you get in the habit of cleaning up immediately after routing.

Set aside any bits with caked-on residue or scorched edges. They'll require a bit more work. You'll also want to pay close attention to the condition of the bearings on the bits that have them. Remove the bearings with an Allen wrench and set them aside so they don't get lost or roll off the bench. You'll be

With a diamond stone clamped to a worksurface, carefully hone the flat side of the bit. Make sure to keep the surface of the bit flat as you go, progressing through fine and super-fine grits.

Diamond-coated sharpening stones are available in several shapes, sizes, and grits. These paddles are the least expensive option, and they're a perfect fit for most router bits.

using a commercial cleaning solution on the bits, and you don't want to get any of it in the bearings, as it can dissolve the lubricant. There are several kinds of cleaning products available from most of the online retailers (refer to Sources on page 51).

SHANKS. I also take a minute at this point to check out the shank of each bit. You should remove any burrs or rust on the shanks as they can affect the ability of the router's collet to grip the bit properly. Sandpaper can clean up most nicks caused by normal wear and tear.

CARBIDE CHECK. Finally, you'll want to be on the lookout for any damage to the carbide cutting edges. If you spot any large nicks or cracks, it's best to throw the bit away. Carbide is very hard, but it fractures relatively easily. The last thing you want is a piece of carbide flying off when you're using the bit.

CLEANING. Once you've rounded up the bits that need more work, follow the directions of the cleaner and spray or soak the bit as recommended. I use a small container to hold the bits while I spray them with a cleaning solution. In the main photo on the opposite page, you can see the old metal baking pan I use. It's ideal for containing the cleaning solution while scrubbing and brushing the bits.

After letting the cleaner soak in a little bit, you can follow up with a good scrubbing using the wire brush. This will remove even the most stubborn, caked-on grime. It should also get rid of most of the scorch marks. But don't go too mad trying to remove scorch marks. They're just burnt-on pitch and resin. They don't affect the carbide or performance.

BEARING CHECK. For the bearings, a toothbrush and a little tube of lubricant are all you need. The needle tip of the lubricant shown in the left photo below helps you inject the lubricant right where it's needed and get a slow-moving bearing running smoothly again.

But if the bearing still doesn't spin freely, it's time for a replacement. Get out your calipers and measure the inside and outside diameters, as well as the thickness of the bearing, as shown in the photo and drawing below to order a replacement. Sources on page 51 has a good place to buy replacement bearings.

HONING. The last step in the rejuvenation of your bits is to hone the edges. For this, you'll need some type of diamond stone. Nothing else will sharpen carbide. The paddles shown in the photos above are my favorites for this task.

A quick bit of advice about honing: You should only hone the flat surfaces of your bits. It's best to leave the beveled edges alone. If a bit needs more than this, take it to a professional and have it sharpened on a CNC machine. Doing it yourself will almost certainly result in changing the profile of the bit.

Just clamp a paddle to the bench and take a few strokes on each side (left photo above). Alternate between each flute or flat surface, taking an equal number of strokes on each. Make sure to have a good light handy, so you can inspect your work as you go. You'll know you're done when you see a shiny edge, and you'll be able to feel the difference in the sharpness of the bit.

It doesn't take much time to clean up your router bits. And once you get the hang of it, you'll not only get more life out of them, but you'll also see better results in their performance. W

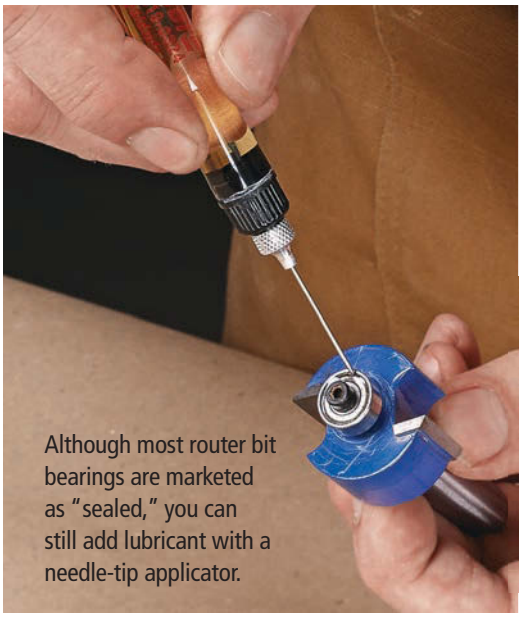

Although most router bit bearings are marketed as "sealed," you can still add lubricant with a needle-tip applicator.

Use a caliper to determine the three measurements for a replacement bearing.

selecting a Vintage Hand Saw

Rarely do I complete a woodworking project without reaching for my hand saw at least once. Whether it's to quickly break down stock (main photo) or to complete a cut that a power saw can't quite reach, there's no doubt that a good hand saw (or two) still plays an important role in any workshop.

Unfortunately, a top-quality new hand saw can set you back more than you may be willing to spend. The good news is that vintage saws from the early part of the last century can still be found at flea markets and garage sales all over the country. However, they typically require a little TLC to return them to a usable condition.

The key to buying a quality used hand saw that will be worth your time and restoration efforts is knowing what to look for in the first place. Finding a good quality hand saw in the second-hand market is actually quite easy. That's because most of the saws made in the first half of the twentieth century were made by a handful of manufacturers. And they all produced excellent saws. Take a look at some of the helpful tips below, and you'll get a pretty good idea when to snatch up that $5 bargain — and when to keep on walking.

▲ Vintage saw handles (top) were finely shaped for all all day comfort. Later saw handles were more boxy and less refined.

▲ The brass medallions on the saw handle were used by saw manufacturers to emboss their company name and logo.

FOCUS ON QUALITY MAKERS

The big manufacturers in the U.S. hand saw market in the early 1900s included *Disston*, *Atkins*, *Simonds*, and *Bishop*. And by all accounts, *Disston* was the trailblazer in the industry. Any new designs they introduced were soon followed by their competitors.

BRASS HARDWARE. One of the quickest and easiest features to spot that indicates a vintage saw is the use of all brass hardware for the saw handle bolts, nuts, and medallion. These components hold

the wood handle to the saw plate. All major manufacturers used brass hardware until about 1950 when, in an effort to reduce production costs, the changeover to steel hardware occurred.

The presence of the medallion is helpful in one other way; it is oftentimes the best way to identify the manufacturer of the saw (lower right photo, previous page). Most saw makers included an "etch" on the saw plate, as well, but due to the inevitable oxidation that occurs on steel blades, the etches are often difficult (if not impossible) to see until after the saw is cleaned up.

BLADE FEATURES. In the absence of a visible etch (or medallion), it can be difficult to determine the maker of a saw based on the blade alone. There are plenty of fine saws, for example, with skewed and straight-back blades (photo above). Another distinction to look for is whether the handle is "set-in" to the blade or positioned behind it. One design isn't necessarily better than the other. It really depends on how the saw feels in your hand.

Regardless of the blade or handle position style, most saws from this era will feature spring steel and taper-ground blade construction. The use of spring steel is significant because it allows the saw blade to return to its original shape despite bending and twisting. And a blade that has been taper ground simply means the saw blade is thicker along the cutting edge than at the back edge. This, along with proper tooth setting, keeps the blade from binding in the wood as you make the cut.

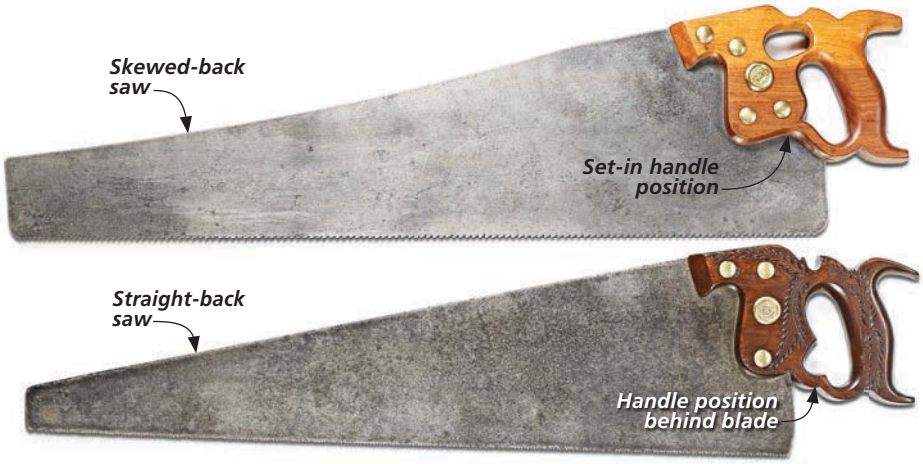

▲ Hand saws with a skewed back edge were first introduced in the late 1800s. Straight-backed saws continued to be produced for many decades after the turn of the century. Handle positions, either "set-in" or behind the blade, were available on most saws.

HANDLE FEATURES. Many of these vintage saws have ornate, finely shaped handles (lower left photo, previous page). Most of the details added were done in an effort to make the handle comfortable for all-day use. All this carving and shaping was done by hand, which also added to production costs.

FOCUS ON BLADE CONDITION

It's only natural that a saw pushing a century old will have some "blemishes" that need to be dealt with. But picking a saw with as few of these problems as possible will take your saw from junk to user much more quickly.

SAW BLADE CONDITION. Considering that most problems with a saw's wood handle can be fixed rather easily, the focus should be on the condition of the blade. Try to avoid saws with heavy rust on the blade as shown in the photo at right. If the blade has so much rust that it has started to flake off, chances are there will be pitting underneath. Pitting, especially around the tooth line, will keep the blade from ever being as crisp and sharp as you need for a smooth, clean cut.

Kinks in the blade can also be a deal-breaker. While it might be possible to hammer these out, it's best to stay away from them entirely. The same goes for any cracks in the saw blade, especially around the teeth gullets as shown in the same photo, above right.

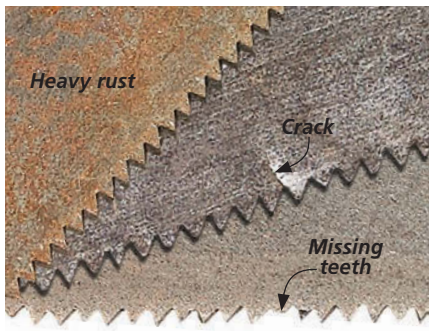

▲ Heavily-rusted blades and cracks should be avoided in most cases. A new tooth line can be cut to replace missing teeth.

Smaller blade imperfections, such as a missing tooth or two (photo, above), uneven tooth lines, or even broken or narrow toes aren't necessarily insurmountable problems. Most saws will need to be sharpened after they're cleaned up. And saws with damage to the toe can be cut shorter.

HANDLE CONDITION. The condition of the handle is generally the least concerning issue. Splits can usually be glued back together. And fixing a broken horn is just a matter of gluing on a replacement piece of wood (photo at left). If the finish is deteriorated, it's a good idea to strip or sand the handle down to bare wood and apply a new finish.

Finding an old saw with collectable value is rare. If you think you've found one, it's a good idea to do a little research before you break out the cleaners and sandpaper. But for the bulk of the saws out there, you may just find a vintage, quality saw among the rust. And with a little elbow grease, it'll be ready for another century of use. W

▲ Repairing a broken horn on a saw handle is as easy as squaring the broken section and gluing on a matching piece. Use files and sandpaper to shape the new piece.

what makes a Good Glue Joint

Glue is a key ingredient in any woodworking project you build. But when it comes to the attention given to glue-ups, they often get short shrift. I'm sure you've seen woodworking plans where they address the assembly process by writing, "Now glue it together."

The reality is, some basic decisions that you make when gluing wood together can mean the difference between success and failure. Fortunately, it's not difficult to take the time to get it right. Here are some things to keep in mind the next time you get out the bottle of yellow wood glue.

WOOD GLUING 101. The basic nature of wood itself plays a big role in how strong (or weak) a glue joint will be. Some joints work well all on their own, while others are bound for failure.

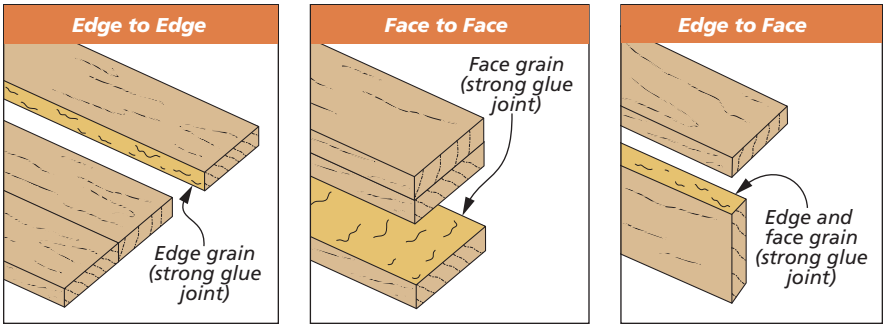

When joining wood edge to edge, for example, you have plenty of good glue surface. This is because the fiber walls of wood run parallel to the edges. So an edge-to-edge joint, such as a glued-up panel, will be strong. The same goes for a face-to-face or edge-to-face joint (refer to the drawings on the left).

End grain, however, exposes the hollow, open ends of the wood fibers. This makes it a poor glue surface, and end-to-edge joints tend to fail. In fact, the very purpose of many woodworking joinery techniques is to strengthen these end-to-edge connections.

INCREASING GLUE SURFACE WITH JOINERY. The theory behind woodworking joinery is pretty simple: Rabbets, half laps,

mortises and tenons, and other joints all increase the amount of edge-grain or face-grain surface area coming into contact between parts. This means you have more surface for applying glue, so it's less likely the joint is going to fail.

Regardless of which joint you choose, there are some universal truths that apply when it comes time to glue them together. For glue to be effective in a woodworking joint, one key to success is to aim for a perfect, friction fit. Too loose, and the glue may not contact both surfaces of the wood. Too tight, and the glue may actually squeeze out of the joint as you apply the clamps.

Another theory I've seen floating around is that it's a good idea to leave the surface of the wood a little rough for your joinery. The idea is that this will give the glue something to grab onto and hold tightly. While it may add a bit more surface area, I tend to avoid doing this, as it can negatively impact the fit of the joint. This is especially a problem on a visible joint like the rabbet shown in the photo above.

Instead, I aim for clean, smooth surfaces. A well-made joint will have plenty of glue surface on its own to hold the project together.

Aim for smooth surfaces when gluing up joinery. Masking tape can catch squeeze-out in corners that's hard to clean up.

An inexpensive foam brush makes a great glue spreader when you have to join boards face to face.

You want the entire edge of a joint covered with glue. To accomplish this, it's tough to beat the old finger trick.

Squeezeout is your friend. It ensures that there's enough glue in the joint, and you can always scrape it off easily later on.

DETAILS OF A GREAT GLUE JOINT. Another question about glue that often comes up is how much to use? I lay a single bead along one edge (not both edges) of the mating joint. Then, I'll smooth out the bead to ensure that the entire surface is covered before applying clamps. Clamp pressure alone won't distribute glue evenly over the entire surface, so you have to help the process along.

If I have a lot of glue to spread, like on the face of a piece, I find that a wide foam brush does the trick (above right photo). For edge-to-edge joints, I'll just use my finger (far left photo).

When it comes time to clamp the joint together, you want nice, firm pressure, but try to avoid torquing down those clamps too much. This can actually press glue out of the joint and starve it of glue. It could also pull your pieces out of alignment by creating bows in panels, for example. The clamps are there to hold the pieces together until the glue dries, so you just want a good, even hold on your assemblies.

If you see small, even beads of glue squeezing out at the joint line once the clamps are on, that's actually a good thing. It means you applied enough glue to the joint. Frankly, I worry if there's no squeezeout at a joint.

If you have a lot of squeezeout, the joint will still hold. You'll just have more mess to clean up later. As with most techniques, applying glue properly is a skill that comes with practice. But this seemingly simple part of woodworking is always worth some extra attention.

DON'T GET STUCK WITH BAD GLUE

How you store wood glue also affects the quality of glueups. While manufacturers often state that the shelf life of glue is a year or two, the reality is you can make it last much longer by storing it properly.

The key is to store glue at a consistent, cool temperature. High heat and freezing can shorten a glue's lifespan, so it's a good idea to store glue in a different area of the home if your shop isn't temperature-controlled. And if you're unsure how old your glue is, you can prevent that in the future using the tip at right.

Writing the date on a bottle of glue after you buy it lets you quickly and easily know how old it is.

questions & answers

hardwood

Lumber Thickness

Q *I recently purchased some hardwood lumber that was sold as 4/4, but it's actually only 13/16" thick. I thought 4/4 meant "four-quarters," or 1" thick?*

Michael Price
Georgetown, Kentucky

A Well, Michael, you are partially correct. However, the hardwood industry has a dimensioning language that is very different from what you may be used to. And the reasoning behind it starts at the saw mill.

THE QUARTER SYSTEM. Most mills produce hardwood lumber in 1/4" increments, starting at 1". So when a 1"-thick board comes off the saw at the mill, it is truly four-quarters, or a full 1" thick. The same can be said for 5/4, 6/4, 8/4, and 12/4 lumber. They will exit the saw blade at their stated sizes of 1 1/4", 1 1/2", 2", and 3", respectively.

But as you have discovered, that is not the end of the story. Because these boards are generally cut with a very large and aggressive blade at the mill, they usually come off the saw with a rough-sawn surface. This is where many hardwood producers have to make a decision. Do they sell their lumber in this rough state for a lower price? Or do they surface the wood smooth and charge more? Both options have their benefits and drawbacks.

ROUGH SAWN. The trouble with rough-sawn lumber is that it's difficult to see grain patterns and color in the wood. Plus, retailers are limited to selling their boards to woodworkers who have planers and are willing to do the extra work of surfacing the lumber in exchange for a better price. Another benefit for woodworkers who are willing to do their own planing is that they'll often be able to yield thicker boards than the mill can achieve.

Nominal size	Rough size	S1S	S2S
4/4	1"	7/8"	13/16"
5/4	1 1/4"	1 1/8"	1 1/16"
6/4	1 1/2"	1 3/8"	1 5/16"
8/4	2"	1 13/16"	1 3/4"
12/4	3"	2 13/16"	2 3/4"

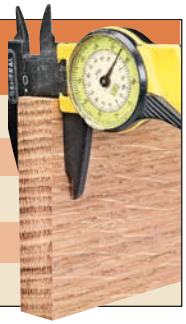

SURFACED. More and more, hardwood dealers prefer the option of surfacing the lumber before selling to the consumer. Most sell their lumber as either S1S, which means "surfaced one side," or S2S, surfaced two sides. The latter option is the more common of the two.

While smoother wood looks nicer on the lumber rack, it also loses some thickness during the surfacing process (a slight amount is lost in the drying process, as well). Four-quarter, S1S lumber is typically around 7/8" thick, while S2S lumber measures just 13/16" thick (see chart). But even though it is now thinner than the original 1"-thick boards, most retailers will still refer to it as four-quarter.

BUYING OPTIONS. If you would prefer to buy rough-sawn lumber, there are still plenty of mills and lumberyards that sell stock in this manner. You might also check to see if there are any operators of small, portable sawmills in your area. You should be able to buy rough-sawn stock from them. They may even offer custom milling services so that you get stock the exact thickness you need.

hardware & supplies
Sources

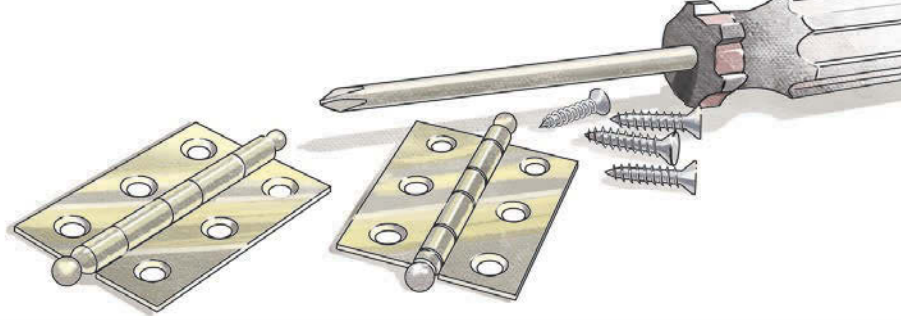

Most of the materials and supplies you'll need to build the projects are available at hardware stores or home centers. For specific products or hard-to-find items, take a look at the sources listed here. You'll find each part number listed by the company name. See the right margin for contact information.

TIPS & TECHNIQUES *(p.4)*

- **Travers Tool**
  Magnetic Holder 99-001-23

RARE-EARTH MAGNETS *(p.8)*

- **Lee Valley**
  Magnet & Cup Sets . . . . varies

RESAW GEAR *(p.10)*

- **Highland Woodworking**
  Wood Slicer Blades . . . . . varies
  Tri-Master Blades . . . . . varies
  Bandrollers . . . . . varies
  Cool Blocks . . . . . varies

- **Kreg Tool**
  Band Saw Fence KMS7200
  4½" Resaw Guide . . . KMS7213
- **Rockler**
  Magswitch Starter Kit . . . 38007
  Magswitch Resaw Guide . . 29514

STRAIGHTEDGE GUIDES *(p.12)*

- **Rockler**
  Clamp Guide 3-Pack 44314
  Router Plate 38428
  Circular Saw Plate 33408
  Straight Edge System 36495
- **Amazon**
  Bora Tool Guides . . . . . varies

KEEPSAKE BOX *(p.14)*

The hardwood lumber for the keepsake box was purchased from *Cook Woods*. The box was finished with two coats of spray lacquer.

CURVED TRAY *(p.18)*

Hearne Hardwoods and *Boards and Beams Wood Products* are a couple of online sources for domestic lumber.

The curved tray was stained with one coat of *Minwax*'s Aged Oak gel stain. Then it was sprayed with two coats of lacquer.

DINING TABLE *(p.22)*

- **Constantine's**
  Cherry Turning Blanks 1TS53
  Cherry Veneer FV1048
- **Lee Valley**
  Alignment Pins 00S10.06
  Leg Braces 00H33.40
  Leg Glides 06W01.01
  Lever Leaf Locks 13K04.01
  Table Extenders 17K15.10

The table was stained with a mixture of three parts *Zar* cherry stain and one part *Wood Kote Jel'd* stain (cherry). Then it was sprayed with two coats of lacquer.

DINING CHAIRS *(p.32)*

- **Lee Valley**
  Leg Braces 00H33.20
  Hanger Bolts & Nuts . . 00H33.06
  Tabletop Fasteners 13K01.01
  Leg Glides 06W01.01

The upholstery foam and fabric for the chair seats were purchased from a local fabric store. The chairs were finished in the same manner as the dining table discussed above.

STEAM BENDING *(p.42)*

- **Rockler**
  Steam Bending Kit 42826

ROUTER BIT REHAB *(p.44)*

- **Rockler**
  Bearing Lube Pen 31801
  EZE-Lap Diamond Set . . 24663

- **McMaster-Carr**
  Bearings . . . . . varies

Get the Season 7 DVD set of the *Woodsmith Shop*! The set includes two DVDs with all the episodes plus a CD-ROM with bonus plans and articles. Collect the entire series by ordering individual seasons for $29.95 or save with package deals. Learn more at Woodsmith.com!

DVD Set: Season 7 . . . . . $29.95

MAIL ORDER SOURCES

Project supplies may be ordered from the following companies:

Woodsmith Store
800-444-7527

Rockler
800-279-4441
rockler.com

amazon.com

Boards and Beams
973-299-6100
woodboardsandbeams.com

Constantine's
954-561-1716
constantines.com

Cook Woods
877-672-5275
cookwoods.com

Hearne Hardwoods
888-814-0007
hearnehardwoods.com

Highland Woodworking
800-241-6748
highlandwoodworking.com

Kreg Tool
800-447-8638
kregtool.com

Lee Valley
800-871-8158
leevalley.com

McMaster-Carr
630-600-3600
mcmaster.com

Minwax
800-523-9299
minwax.com

Travers Tool
800-221-0270
travers.com

Wood Kote
800-843-7666
woodkote.com

Zar
zar.com

looking inside
Final Details

▲ *Keepsake Box.* This small box has a lot going for it — interlocking finger joints, gracefully curved sides and ends, and a mix of attractive hardwoods. And the best part is that you can make it in a weekend. Turn to page 14 to get started.

◄ *Tray Centerpiece.* At first glance, this curved, shallow tray appears to be carved out of a single piece of solid wood. But in reality, a thick blank is resawn into three separate pieces, shaped, and then glued back together. Learn how it's done starting on page 18.

Dining Table & Chairs. An expandable table and a set of comfortable chairs make up the heart of this heirloom dining room suite. Beginning on page 22, each step of the construction process is explained in detail.